BOCK Condensing Units air-cooled

BOCK

colour the world
of tomorrow

SHG condensing units air-cooled single-stage 1

SHA condensing units air-cooled single-stage 2

SHGZ condensing units air-cooled two-stage 3

SHGZ condensing units air-cooled two-stage

ASERCOM Certification
Based on the requirements of the EU Ecodesign Directive and the corresponding regulation.

ASERCOM, the association of European manufacturers of components for refrigeration and air conditioning, addresses scientific and technical challenges, promotes performance and safety standards, supports better environmental protection, and serves the refrigeration and air conditioning industry and its customers. ASERCOM's condensing unit certification program enables an objective performance comparison of the wide range of products on the market..
Many of the BOCK condensing units are certified.
An overview can be found here:
www.asercom.org/list-of-certified-condensing-units/

Your solution for all ambient temperatures

Whether in the desert or in the arctic -
BOCK condensing units offer maximum reliability and efficiency.

Efficient condensers:
- Condenser in reliable fin-tube design
- One condenser for low and high ambient temperatures

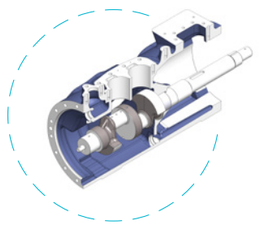

Optimized drive gear: more resistant to lack of lubrication

Reliable and safe oil supply

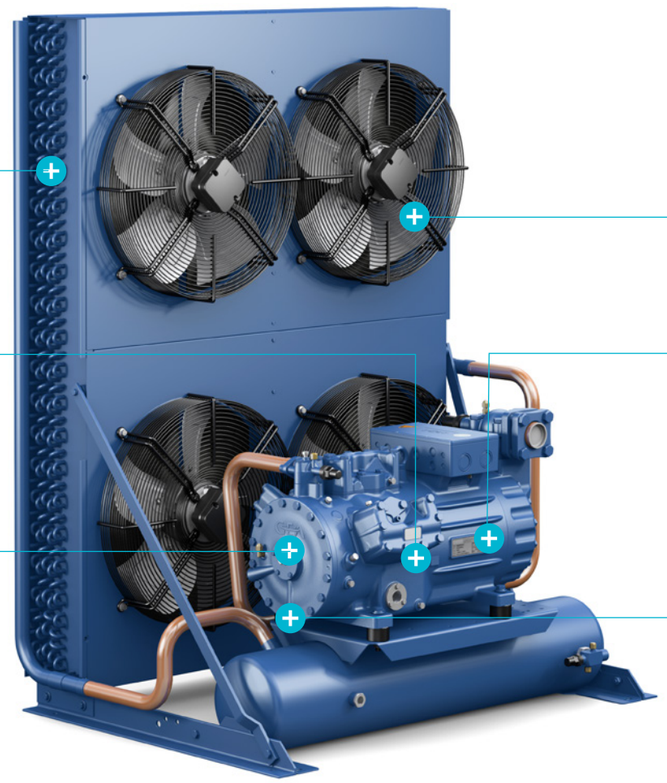

Rugged fans:
- suitable for speed regulation
- made in Germany

Service friendly design:
- Easily to be replaced build-in motor due to slide fit (not press fit)
- Easily removable oil strainer

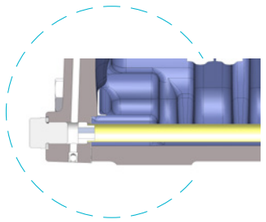

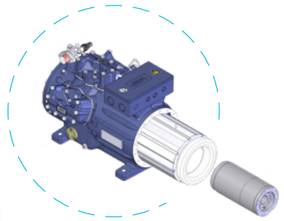

Common refrigerants

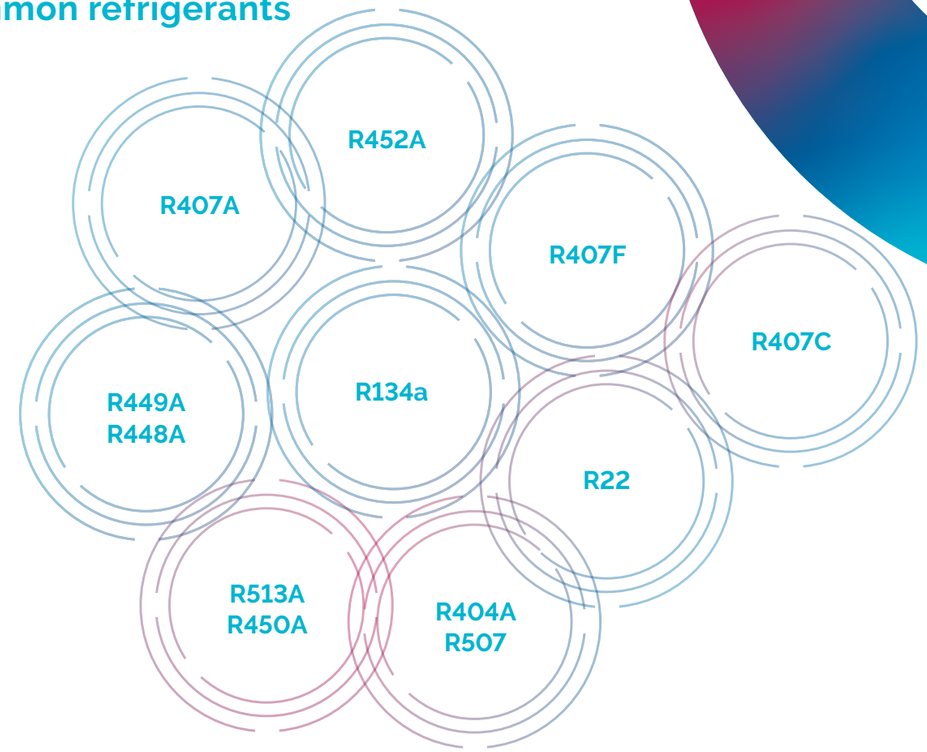

BOCK VAP

COMPRESSOR SELECTION PROGRAM

Up-to-date information on technical data, performance data, operating limits and much more can be accessed online via the BOCK compressor selection program (VAP): **vap.bock.de**

SHG
Condensing units air-cooled single-stage

9 At a glance
10–59 Performance data
60–61 Technical data
62–65 Dimensions and connections
66 Scope of supply and accessories

SHG-L
Condensing units air-cooled

With the current completely improved condensing unit range, Bock offers you a comprehensive program from 2 to 40 HP (5 to 116.5 m³/h) displacement.
The newly developed compressors HG44e, HG56e, HG66e and the optimized HG22e and HG34e, are used.

Efficiency

Reliability

The PLUS of the new compressor series

- high efficiency (COP)
- high reliability and excellent emergency running characteristics through the implementation of an optimized drive gear
- highly efficient electric motors of the latest generation

This is why you can rely on BOCK compressors

- from the smallest to the largest Bock compressor: equipped with the most reliable way of oil supply: an oil pump
- service-friendly: simple oil change and motor change by means of stator sliding seat directly on site without special tools.

BOCK condensing units - proven for years under the toughest conditions:

- Tube-fin heat exchanger, one design for low and high ambient temperatures.
- Robust fans, suitable for speed control - made in Germany.
- Safety for the cooled goods: from 7,5 HP (27m³/h) resp. 15 HP (48 m³/h) a double or quadruple redundant design of the fans. If a fan should fail, safe cooling is still guaranteed.

SHG air-cooled single-stage condensing units

At a glance

The current range

6 model sizes with 19 capacity stages from 5.4 to 116.5 m³/h (50 Hz)

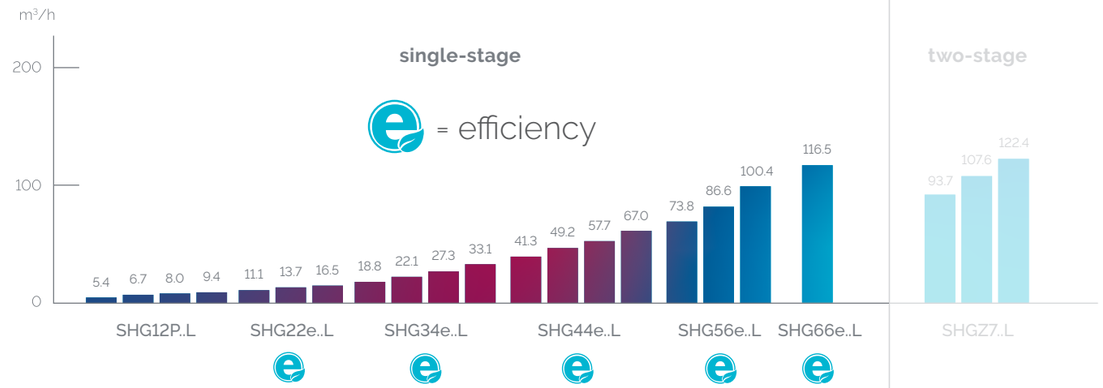

Type key – condensing units air-cooled

SHGX66e/1340-4SL

- Air-cooled condensing unit
- Motor variant [4]
- Number of poles
- Swept volume
- e-series [3]
- Number of cylinders
- Size
- Ester oil filling [2]
- Series [1]

[1] SHG = Hermetic Gas-cooled (suction gas-cooled)
[2] X = Ester oil filling (HFC refrigerants e.g. R134a, R404A, R507, R407C)
[3] = Additional declaration for e-series and P = Pluscom compressors
[4] S = More powerful motor e.g. air-conditioning applications

SHG condensing units air-cooled single-stage
Performance data

R134a | 50 Hz

Type	Amb. temp. °C		Cooling capacity Q_o [W] Evaporating temperature °C 5	0	-5	-10	-15	-20	-25	-30
SHG12P/60-4 SL	50	Q	2420	1990	1600	1260	955	695	471	276
		P	1.21	1.13	1.04	0.965	0.891	0.828	0.779	0.750
	46	Q	2600	2130	1720	1360	1040	768	535	336
		P	1.18	1.10	1.02	0.950	0.879	0.817	0.768	0.736
	43	Q	2730	2240	1810	1440	1110	823	584	382
		P	1.15	1.08	1.01	0.937	0.868	0.807	0.757	0.724
	38	Q	2960	2440	1980	1570	1220	918	667	459
		P	1.11	1.04	0.981	0.913	0.848	0.788	0.738	0.702
	32	Q	3250	2680	2180	1740	1360	1040	768	551
		P	1.05	1.00	0.942	0.881	0.820	0.762	0.711	0.672
	27	Q	3500	2890	2350	1890	1480	1140	854	628
		P	0.999	0.957	0.907	0.852	0.795	0.739	0.687	0.645
	15	Q	4140	3430	2800	2260	1790	1390	1070	812
		P	0.868	0.851	0.822	0.781	0.734	0.682	0.629	0.579
SHG12P/75-4 L	50	Q	2950	2430	1960	1550	1180	857	580	338
		P	1.47	1.36	1.25	1.14	1.05	0.974	0.913	0.876
	46	Q	3160	2610	2110	1670	1280	947	660	414
		P	1.43	1.32	1.22	1.12	1.03	0.960	0.899	0.859
	43	Q	3330	2740	2220	1770	1370	1020	720	471
		P	1.40	1.30	1.20	1.11	1.02	0.948	0.886	0.844
	38	Q	3600	2980	2420	1930	1500	1140	823	566
		P	1.34	1.25	1.17	1.08	1.00	0.925	0.862	0.816
	32	Q	3960	3280	2670	2140	1680	1280	949	681
		P	1.27	1.20	1.12	1.04	0.967	0.893	0.829	0.779
	27	Q	4260	3530	2890	2320	1820	1410	1060	777
		P	1.20	1.14	1.08	1.01	0.936	0.865	0.800	0.746
	15	Q	5040	4190	3440	2770	2200	1720	1320	1010
		P	1.04	1.01	0.976	0.922	0.860	0.794	0.727	0.664
SHG12P/75-4 SL	50	Q	3030	2480	1980	1550	1170	838	565	342
		P	1.61	1.50	1.38	1.25	1.13	1.01	0.892	0.779
	46	Q	3250	2660	2140	1680	1280	928	641	408
		P	1.56	1.46	1.35	1.24	1.12	1.00	0.895	0.786
	43	Q	3410	2800	2260	1770	1360	996	699	459
		P	1.53	1.43	1.33	1.22	1.11	1.00	0.897	0.791
	38	Q	3690	3030	2450	1940	1490	1110	797	546
		P	1.46	1.38	1.29	1.20	1.10	0.999	0.898	0.799
	32	Q	4010	3310	2680	2130	1660	1250	915	652
		P	1.38	1.32	1.24	1.16	1.07	0.989	0.897	0.806
	27	Q	4290	3540	2880	2290	1790	1360	1020	739
		P	1.31	1.26	1.20	1.13	1.05	0.977	0.893	0.809
	15	Q	4930	4080	3320	2660	2090	1620	1230	935
		P	1.11	1.09	1.07	1.03	0.988	0.933	0.872	0.807
SHG12P/90-4 L	50	Q	3470	2860	2300	1820	1400	1040	732	482
		P	1.88	1.73	1.58	1.42	1.28	1.14	1.02	0.928
	46	Q	3720	3060	2480	1970	1520	1140	813	550
		P	1.82	1.68	1.54	1.40	1.26	1.13	1.01	0.918
	43	Q	3910	3230	2620	2080	1610	1220	877	603
		P	1.78	1.65	1.51	1.38	1.24	1.12	1.00	0.910
	38	Q	4230	3500	2850	2280	1780	1350	989	697
		P	1.69	1.58	1.46	1.34	1.22	1.10	0.994	0.899
	32	Q	4630	3850	3140	2520	1980	1520	1140	818
		P	1.59	1.50	1.40	1.29	1.19	1.08	0.984	0.894
	27	Q	4980	4140	3400	2740	2160	1670	1260	925
		P	1.50	1.43	1.35	1.26	1.17	1.07	0.985	0.900
	15	Q	5840	4890	4030	3280	2620	2050	1580	1200
		P	1.30	1.29	1.26	1.22	1.17	1.11	1.04	0.984

Relating to 20 °C suction gas temperature without liquid subcooling

Supplementary cooling or reduced suction gas temperature

vap.bock.de

SHG condensing units air-cooled single-stage
Performance data

R134a | 50 Hz

Type	Amb. temp. °C		Cooling capacity Q_o [W] Evaporating temperature °C 5	0	-5	-10	-15	-20	-25	-30
SHG12P/90-4 SL	50	Q	3520	2890	2340	1860	1440	1070	733	438
		P	1.92	1.77	1.62	1.47	1.32	1.17	1.03	0.912
	46	Q	3760	3100	2510	2000	1550	1170	824	526
		P	1.86	1.73	1.59	1.45	1.31	1.17	1.04	0.923
	43	Q	3950	3250	2640	2110	1640	1240	891	590
		P	1.82	1.69	1.56	1.43	1.30	1.16	1.04	0.929
	38	Q	4260	3510	2860	2280	1790	1370	1010	696
		P	1.74	1.63	1.51	1.39	1.27	1.15	1.03	0.932
	32	Q	4630	3830	3120	2500	1970	1520	1140	822
		P	1.63	1.55	1.45	1.34	1.24	1.13	1.02	0.926
	27	Q	4960	4100	3340	2680	2120	1640	1250	927
		P	1.54	1.47	1.39	1.30	1.20	1.10	1.00	0.916
	15	Q	5760	4770	3890	3130	2490	1950	1520	1190
		P	1.32	1.28	1.23	1.17	1.10	1.03	0.952	0.875
SHG12P/110-4 L	50	Q	3940	3260	2650	2100	1610	1170	790	457
		P	1.99	1.82	1.66	1.51	1.38	1.26	1.18	1.13
	46	Q	4220	3500	2850	2270	1750	1300	900	562
		P	1.94	1.79	1.63	1.49	1.36	1.25	1.16	1.10
	43	Q	4440	3680	3000	2400	1860	1390	984	641
		P	1.90	1.75	1.61	1.47	1.34	1.23	1.14	1.08
	38	Q	4810	4000	3270	2620	2050	1550	1130	774
		P	1.83	1.69	1.56	1.43	1.31	1.20	1.11	1.05
	32	Q	5280	4400	3610	2900	2280	1750	1310	934
		P	1.73	1.62	1.50	1.38	1.26	1.16	1.07	1.00
	27	Q	5690	4750	3900	3150	2490	1930	1450	1070
		P	1.65	1.55	1.44	1.33	1.22	1.12	1.03	0.954
	15	Q	6720	5630	4650	3770	3010	2350	1820	1390
		P	1.43	1.37	1.30	1.21	1.12	1.02	0.928	0.840
SHG12P/110-4 SL	50	Q	3940	3260	2650	2100	1610	1170	790	457
		P	1.99	1.82	1.66	1.51	1.38	1.26	1.18	1.13
	46	Q	4220	3500	2850	2270	1750	1300	900	562
		P	1.94	1.79	1.63	1.49	1.36	1.25	1.16	1.10
	43	Q	4440	3680	3000	2400	1860	1390	984	641
		P	1.90	1.75	1.61	1.47	1.34	1.23	1.14	1.08
	38	Q	4810	4000	3270	2620	2050	1550	1130	774
		P	1.83	1.69	1.56	1.43	1.31	1.20	1.11	1.05
	32	Q	5280	4400	3610	2900	2280	1750	1310	934
		P	1.73	1.62	1.50	1.38	1.26	1.16	1.07	1.00
	27	Q	5690	4750	3900	3150	2490	1930	1450	1070
		P	1.65	1.55	1.44	1.33	1.22	1.12	1.03	0.954
	15	Q	6720	5630	4650	3770	3010	2350	1820	1390
		P	1.43	1.37	1.30	1.21	1.12	1.02	0.928	0.840
SHG22e/125-4 L	50	Q	4660	3820	3060	2380	1790	1290	893	610
		P	2.32	2.11	1.90	1.69	1.50	1.31	1.15	1.02
	46	Q	5000	4110	3300	2580	1950	1420	989	679
		P	2.27	2.07	1.87	1.68	1.49	1.31	1.15	1.02
	43	Q	5250	4330	3490	2730	2070	1520	1070	736
		P	2.23	2.04	1.85	1.67	1.48	1.31	1.15	1.02
	38	Q	5680	4700	3800	2990	2290	1690	1200	839
		P	2.15	1.98	1.81	1.64	1.47	1.30	1.15	1.01
	32	Q	6210	5150	4180	3310	2550	1900	1380	973
		P	2.04	1.90	1.75	1.60	1.44	1.29	1.14	1.01
	27	Q	6650	5530	4510	3580	2770	2080	1520	1100
		P	1.94	1.82	1.69	1.56	1.42	1.27	1.14	1.01
	15	Q	7700	6440	5270	4230	3310	2520	1880	1390
		P	1.63	1.57	1.50	1.41	1.32	1.21	1.10	1.00

Relating to 20 °C suction gas temperature without liquid subcooling

Supplementary cooling or reduced suction gas temperature

vap.bock.de

SHG condensing units air-cooled single-stage
Performance data

R134a | 50 Hz

Type	Amb. temp. °C		Cooling capacity Q_o [W] Evaporating temperature °C 5	0	-5	-10	-15	-20	-25	-30
SHG22e/125-4 SL	50	Q	4850	3960	3160	2440	1830	1310	905	617
		P	2.31	2.11	1.90	1.70	1.50	1.32	1.16	1.02
	46	Q	5220	4280	3420	2660	2000	1450	1010	692
		P	2.25	2.06	1.87	1.68	1.49	1.31	1.15	1.02
	43	Q	5500	4520	3620	2830	2140	1560	1100	752
		P	2.20	2.03	1.85	1.66	1.48	1.31	1.15	1.02
	38	Q	5960	4900	3950	3100	2360	1730	1230	859
		P	2.11	1.96	1.80	1.63	1.46	1.30	1.15	1.02
	32	Q	6480	5360	4330	3410	2620	1950	1400	993
		P	1.98	1.86	1.73	1.58	1.43	1.28	1.14	1.01
	27	Q	6910	5720	4640	3670	2830	2120	1540	1110
		P	1.87	1.78	1.66	1.54	1.40	1.27	1.13	1.01
	15	Q	7870	6530	5320	4240	3300	2500	1860	1370
		P	1.56	1.53	1.48	1.41	1.32	1.22	1.11	1.01
SHG22e/160-4 L	50	Q	5870	4840	3910	3080	2350	1710	1160	679
		P	2.82	2.58	2.35	2.11	1.86	1.62	1.36	1.10
	46	Q	6280	5200	4220	3350	2580	1910	1340	842
		P	2.74	2.52	2.30	2.08	1.86	1.63	1.39	1.14
	43	Q	6600	5460	4450	3540	2740	2050	1460	955
		P	2.67	2.47	2.26	2.06	1.85	1.63	1.40	1.17
	38	Q	7120	5910	4830	3860	3010	2280	1660	1140
		P	2.55	2.37	2.19	2.01	1.82	1.62	1.42	1.20
	32	Q	7740	6450	5280	4240	3330	2540	1880	1330
		P	2.40	2.24	2.09	1.93	1.77	1.60	1.42	1.22
	27	Q	8270	6900	5660	4560	3590	2760	2050	1480
		P	2.26	2.13	2.00	1.86	1.72	1.56	1.40	1.23
	15	Q	9540	7990	6580	5320	4210	3260	2450	1800
		P	1.91	1.82	1.74	1.65	1.55	1.45	1.33	1.20
SHG22e/160-4 SL	50	Q	5860	4800	3850	3000	2270	1660	1180	819
		P	2.79	2.54	2.29	2.05	1.81	1.59	1.38	1.19
	46	Q	6320	5200	4180	3280	2500	1840	1310	912
		P	2.72	2.49	2.26	2.03	1.80	1.59	1.39	1.20
	43	Q	6660	5490	4430	3490	2670	1980	1420	987
		P	2.67	2.45	2.23	2.01	1.79	1.59	1.39	1.21
	38	Q	7210	5970	4840	3830	2950	2200	1590	1130
		P	2.57	2.37	2.17	1.97	1.77	1.58	1.39	1.22
	32	Q	7870	6530	5320	4240	3290	2480	1810	1290
		P	2.43	2.27	2.09	1.92	1.74	1.56	1.38	1.22
	27	Q	8400	6990	5720	4570	3570	2710	2000	1440
		P	2.31	2.17	2.02	1.86	1.70	1.53	1.37	1.21
	15	Q	9620	8050	6620	5330	4200	3230	2420	1780
		P	1.98	1.90	1.80	1.70	1.58	1.45	1.31	1.17
SHG22e/190-4 L	50	Q	7360	6110	4970	3940	3040	2260	1630	1130
		P	3.75	3.43	3.12	2.81	2.52	2.23	1.96	1.69
	46	Q	7980	6640	5410	4300	3330	2500	1800	1260
		P	3.63	3.33	3.04	2.76	2.48	2.21	1.95	1.70
	43	Q	8430	7020	5730	4570	3550	2670	1940	1360
		P	3.53	3.25	2.98	2.71	2.45	2.20	1.94	1.70
	38	Q	9150	7640	6250	5000	3900	2950	2160	1520
		P	3.35	3.11	2.87	2.64	2.40	2.16	1.93	1.69
	32	Q	9970	8340	6840	5500	4310	3280	2410	1720
		P	3.14	2.94	2.74	2.53	2.33	2.11	1.90	1.68
	27	Q	10700	8890	7310	5890	4630	3540	2620	1890
		P	2.96	2.79	2.62	2.45	2.26	2.07	1.88	1.67
	15	Q	12100	10100	8340	6750	5340	4120	3090	2260
		P	2.52	2.44	2.35	2.24	2.11	1.98	1.82	1.65

Relating to 20 °C suction gas temperature without liquid subcooling

Supplementary cooling or reduced suction gas temperature

vap.bock.de

SHG condensing units air-cooled single-stage
Performance data

R134a | 50 Hz

Type	Amb. temp. °C		Cooling capacity Q_o [W] Evaporating temperature °C 5	0	-5	-10	-15	-20	-25	-30
SHG22e/190-4 SL	50	Q	7350	6110	4980	3960	3080	2320	1700	1220
		P	3.72	3.42	3.12	2.83	2.55	2.28	2.02	1.78
	46	Q	7950	6620	5410	4320	3370	2560	1890	1370
		P	3.60	3.32	3.05	2.79	2.53	2.27	2.03	1.79
	43	Q	8390	7000	5720	4580	3580	2730	2030	1480
		P	3.50	3.25	3.00	2.75	2.50	2.26	2.02	1.80
	38	Q	9100	7600	6230	5000	3920	3000	2250	1660
		P	3.33	3.11	2.89	2.67	2.45	2.23	2.01	1.79
	32	Q	9930	8300	6810	5480	4310	3310	2490	1850
		P	3.12	2.94	2.76	2.57	2.37	2.17	1.97	1.77
	27	Q	10600	8850	7270	5860	4620	3550	2680	2000
		P	2.95	2.80	2.64	2.48	2.30	2.12	1.93	1.74
	15	Q	12100	10100	8310	6710	5300	4090	3090	2310
		P	2.54	2.46	2.37	2.26	2.13	1.99	1.83	1.66
SHG34e/215-4 L	50	Q	7510	6110	4840	3730	2760	1970	1360	933
		P	3.88	3.48	3.12	2.78	2.48	2.21	1.99	1.82
	46	Q	8250	6750	5390	4180	3130	2260	1570	1070
		P	3.79	3.43	3.09	2.77	2.48	2.22	2.00	1.82
	43	Q	8800	7220	5790	4510	3400	2470	1730	1190
		P	3.72	3.38	3.06	2.76	2.48	2.22	2.00	1.81
	38	Q	9680	7980	6440	5060	3850	2830	2010	1390
		P	3.59	3.29	3.01	2.73	2.47	2.22	2.00	1.80
	32	Q	10700	8860	7180	5680	4370	3250	2330	1620
		P	3.42	3.17	2.92	2.68	2.44	2.21	1.98	1.78
	27	Q	11500	9550	7770	6180	4780	3580	2590	1820
		P	3.26	3.05	2.84	2.62	2.40	2.18	1.96	1.76
	15	Q	13300	11100	9020	7220	5630	4260	3110	2200
		P	2.83	2.72	2.60	2.45	2.28	2.09	1.89	1.68
SHG34e/215-4 SL	50	Q	7510	6110	4840	3730	2760	1970	1360	933
		P	3.88	3.48	3.12	2.78	2.48	2.21	1.99	1.82
	46	Q	8250	6750	5390	4180	3130	2260	1570	1070
		P	3.79	3.43	3.09	2.77	2.48	2.22	2.00	1.82
	43	Q	8800	7220	5790	4510	3400	2470	1730	1190
		P	3.72	3.38	3.06	2.76	2.48	2.22	2.00	1.81
	38	Q	9680	7980	6440	5060	3850	2830	2010	1390
		P	3.59	3.29	3.01	2.73	2.47	2.22	2.00	1.80
	32	Q	10700	8860	7180	5680	4370	3250	2330	1620
		P	3.42	3.17	2.92	2.68	2.44	2.21	1.98	1.78
	27	Q	11500	9550	7770	6180	4780	3580	2590	1820
		P	3.26	3.05	2.84	2.62	2.40	2.18	1.96	1.76
	15	Q	13300	11100	9020	7220	5630	4260	3110	2200
		P	2.83	2.72	2.60	2.45	2.28	2.09	1.89	1.68
SHG34e/255-4 L	50	Q	8900	7370	5940	4640	3490	2520	1750	1210
		P	4.74	4.27	3.81	3.37	2.95	2.57	2.24	1.96
	46	Q	9740	8080	6520	5110	3860	2800	1960	1360
		P	4.62	4.19	3.76	3.34	2.95	2.58	2.26	1.99
	43	Q	10400	8590	6950	5460	4140	3020	2120	1470
		P	4.52	4.12	3.71	3.31	2.94	2.58	2.27	2.00
	38	Q	11400	9420	7640	6020	4590	3380	2400	1680
		P	4.34	3.98	3.61	3.25	2.90	2.57	2.27	2.01
	32	Q	12500	10400	8440	6680	5120	3800	2740	1950
		P	4.10	3.79	3.47	3.15	2.83	2.53	2.25	2.01
	27	Q	13400	11200	9080	7210	5560	4150	3020	2180
		P	3.88	3.62	3.34	3.05	2.76	2.48	2.22	1.99
	15	Q	15400	12900	10600	8410	6560	4990	3720	2770
		P	3.34	3.17	2.99	2.78	2.57	2.35	2.13	1.93

Relating to 20 °C suction gas temperature without liquid subcooling

Supplementary cooling or reduced suction gas temperature

vap.bock.de

SHG condensing units air-cooled single-stage
Performance data

R134a | 50 Hz

Type	Amb. temp. °C		Cooling capacity Q_o [W] Evaporating temperature °C 5	0	-5	-10	-15	-20	-25	-30
SHG34e/255-4 SL	50	Q	8900	7370	5940	4640	3490	2520	1750	1210
		P	4.74	4.27	3.81	3.37	2.95	2.57	2.24	1.96
	46	Q	9740	8080	6520	5110	3860	2800	1960	1360
		P	4.62	4.19	3.76	3.34	2.95	2.58	2.26	1.99
	43	Q	10400	8590	6950	5460	4140	3020	2120	1470
		P	4.52	4.12	3.71	3.31	2.94	2.58	2.27	2.00
	38	Q	11400	9420	7640	6020	4590	3380	2400	1680
		P	4.34	3.98	3.61	3.25	2.90	2.57	2.27	2.01
	32	Q	12500	10400	8440	6680	5120	3800	2740	1950
		P	4.10	3.79	3.47	3.15	2.83	2.53	2.25	2.01
	27	Q	13400	11200	9080	7210	5560	4150	3020	2180
		P	3.88	3.62	3.34	3.05	2.76	2.48	2.22	1.99
	15	Q	15400	12900	10600	8410	6560	4990	3720	2770
		P	3.34	3.17	2.99	2.78	2.57	2.35	2.13	1.93
SHG34e/315-4 L	50	Q	10400	8630	7020	5560	4260	3150	2230	1500
		P	5.79	5.18	4.60	4.04	3.51	3.02	2.57	2.17
	46	Q	11400	9460	7710	6130	4730	3530	2540	1750
		P	5.64	5.08	4.53	4.01	3.51	3.05	2.62	2.23
	43	Q	12100	10100	8230	6560	5080	3810	2760	1940
		P	5.53	4.99	4.47	3.97	3.50	3.05	2.64	2.27
	38	Q	13300	11100	9060	7250	5640	4270	3130	2240
		P	5.31	4.83	4.35	3.89	3.45	3.04	2.65	2.30
	32	Q	14700	12300	10100	8050	6300	4800	3560	2590
		P	5.04	4.61	4.18	3.77	3.37	2.99	2.64	2.31
	27	Q	15800	13200	10900	8690	6820	5220	3900	2870
		P	4.80	4.42	4.03	3.66	3.29	2.94	2.61	2.31
	15	Q	18200	15300	12600	10200	7990	6150	4650	3470
		P	4.21	3.93	3.64	3.36	3.07	2.79	2.51	2.25
SHG34e/315-4 SL	50	Q	11400	9370	7560	5950	4540	3340	2360	1590
		P	6.02	5.47	4.93	4.40	3.90	3.42	2.97	2.58
	46	Q	12300	10200	8200	6470	4970	3690	2640	1820
		P	5.88	5.36	4.86	4.36	3.88	3.43	3.01	2.63
	43	Q	13000	10700	8670	6870	5290	3950	2850	2000
		P	5.76	5.27	4.79	4.32	3.86	3.43	3.02	2.66
	38	Q	14100	11700	9470	7520	5830	4390	3210	2290
		P	5.54	5.10	4.67	4.23	3.81	3.41	3.03	2.68
	32	Q	15400	12800	10500	8300	6460	4900	3620	2630
		P	5.26	4.88	4.49	4.11	3.73	3.36	3.02	2.69
	27	Q	16500	13700	11200	8940	6990	5320	3960	2910
		P	5.02	4.68	4.34	3.99	3.65	3.31	2.99	2.68
	15	Q	19000	15900	13000	10500	8200	6300	4750	3540
		P	4.39	4.16	3.92	3.67	3.40	3.14	2.88	2.62
SHG34e/380-4 L	50	Q	13400	11300	9210	7390	5760	4350	3170	2200
		P	7.33	6.61	5.92	5.25	4.62	4.02	3.47	2.97
	46	Q	14500	12200	9960	8010	6280	4780	3510	2500
		P	7.16	6.49	5.83	5.20	4.60	4.04	3.51	3.03
	43	Q	15200	12800	10600	8480	6660	5090	3770	2720
		P	7.02	6.38	5.76	5.16	4.58	4.03	3.52	3.06
	38	Q	16500	13900	11500	9250	7300	5610	4200	3070
		P	6.78	6.19	5.61	5.05	4.52	4.00	3.52	3.08
	32	Q	18100	15200	12600	10200	8040	6210	4680	3470
		P	6.45	5.93	5.41	4.90	4.41	3.94	3.50	3.08
	27	Q	19300	16300	13500	10900	8640	6700	5070	3790
		P	6.17	5.69	5.22	4.75	4.30	3.86	3.45	3.06
	15	Q	22300	18800	15600	12700	10100	7790	5930	4470
		P	5.43	5.07	4.70	4.34	3.98	3.62	3.27	2.94

Relating to 20 °C suction gas temperature without liquid subcooling

Supplementary cooling or reduced suction gas temperature

vap.bock.de

SHG condensing units air-cooled single-stage
Performance data

R134a | 50 Hz

Type	Amb. temp. °C		Cooling capacity Q_o [W] Evaporating temperature °C 5	0	-5	-10	-15	-20	-25	-30
SHG34e/380-4 SL	50	Q	14100	11700	9540	7620	5920	4450	3230	2240
		P	7.23	6.55	5.89	5.24	4.62	4.03	3.48	2.98
	46	Q	15100	12600	10400	8250	6440	4880	3580	2540
		P	7.04	6.41	5.79	5.18	4.59	4.04	3.51	3.03
	43	Q	15900	13300	10900	8730	6830	5200	3840	2760
		P	6.89	6.30	5.70	5.12	4.56	4.03	3.52	3.06
	38	Q	17300	14400	11900	9510	7470	5720	4270	3120
		P	6.63	6.08	5.54	5.01	4.49	3.99	3.52	3.09
	32	Q	18800	15800	13000	10500	8220	6330	4760	3520
		P	6.28	5.81	5.33	4.85	4.38	3.92	3.49	3.08
	27	Q	20100	16900	13900	11200	8820	6810	5150	3830
		P	5.98	5.56	5.13	4.69	4.26	3.84	3.44	3.05
	15	Q	23100	19400	16000	12900	10200	7900	5990	4500
		P	5.21	4.91	4.59	4.27	3.93	3.59	3.25	2.93
SHG44e/475-4 L	50	Q	17200	14400	11900	9540	7480	5640	4010	2550
		P	8.59	7.80	7.04	6.29	5.56	4.87	4.21	3.61
	46	Q	18500	15600	12800	10400	8130	6190	4470	2950
		P	8.36	7.63	6.90	6.19	5.51	4.85	4.23	3.66
	43	Q	19500	16400	13500	10900	8610	6580	4810	3250
		P	8.18	7.47	6.78	6.11	5.45	4.82	4.23	3.68
	38	Q	21100	17700	14700	11900	9400	7240	5360	3740
		P	7.84	7.19	6.56	5.93	5.33	4.75	4.20	3.68
	32	Q	23000	19300	16000	13000	10400	8020	6020	4310
		P	7.40	6.82	6.25	5.69	5.15	4.62	4.12	3.65
	27	Q	24600	20700	17100	14000	11100	8660	6560	4790
		P	7.01	6.49	5.97	5.47	4.97	4.49	4.03	3.60
	15	Q	28200	23800	19800	16200	13000	10300	7880	5960
		P	6.04	5.66	5.28	4.90	4.53	4.16	3.80	3.46
SHG44e/475-4 SL	50	Q	19000	15700	12800	10200	7910	5930	4190	2660
		P	9.32	8.65	7.96	7.28	6.60	5.93	5.30	4.70
	46	Q	20400	16900	13800	11000	8580	6480	4660	3070
		P	9.05	8.43	7.80	7.16	6.52	5.90	5.30	4.74
	43	Q	21400	17800	14500	11600	9070	6890	5000	3370
		P	8.84	8.25	7.66	7.06	6.46	5.86	5.29	4.75
	38	Q	23100	19200	15700	12600	9880	7560	5570	3870
		P	8.45	7.94	7.40	6.86	6.31	5.77	5.25	4.75
	32	Q	25000	20800	17100	13800	10900	8350	6240	4460
		P	7.97	7.53	7.07	6.59	6.11	5.63	5.16	4.71
	27	Q	26700	22200	18200	14700	11700	9010	6800	4950
		P	7.54	7.17	6.77	6.35	5.93	5.49	5.07	4.66
	15	Q	30500	25500	21000	17000	13600	10700	8160	6150
		P	6.52	6.30	6.04	5.76	5.47	5.15	4.83	4.52
SHG44e/565-4 L	50	Q	19800	16700	13900	11300	8930	6810	4900	3180
		P	10.2	9.22	8.25	7.32	6.42	5.58	4.79	4.06
	46	Q	21300	18000	15000	12200	9670	7440	5440	3650
		P	9.97	9.03	8.11	7.22	6.38	5.57	4.82	4.13
	43	Q	22400	18900	15800	12900	10300	7900	5830	3990
		P	9.77	8.86	7.98	7.13	6.32	5.54	4.82	4.15
	38	Q	24200	20500	17100	14000	11200	8650	6470	4560
		P	9.40	8.55	7.73	6.94	6.18	5.46	4.79	4.16
	32	Q	26400	22400	18600	15300	12300	9540	7220	5220
		P	8.90	8.13	7.38	6.66	5.97	5.32	4.70	4.13
	27	Q	28200	23900	19900	16300	13100	10300	7850	5770
		P	8.46	7.75	7.07	6.41	5.77	5.17	4.60	4.08
	15	Q	32400	27500	23000	18900	15300	12100	9360	7100
		P	7.33	6.78	6.25	5.74	5.25	4.78	4.33	3.91

Relating to 20 °C suction gas temperature without liquid subcooling

Supplementary cooling or reduced suction gas temperature

vap.bock.de

SHG condensing units air-cooled single-stage
Performance data

R134a | 50 Hz

Type	Amb. temp. °C		Cooling capacity Q_o [W]						Power consumption P_e [kW]	
			Evaporating temperature °C							
			5	0	-5	-10	-15	-20	-25	-30
SHG44e/565-4 SL	50	Q	22500	18700	15300	12300	9580	7240	5180	3350
		P	10.8	9.98	9.14	8.31	7.49	6.69	5.93	5.22
	46	Q	24100	20000	16400	13200	10400	7890	5730	3830
		P	10.5	9.73	8.96	8.18	7.41	6.66	5.95	5.27
	43	Q	25300	21100	17300	13900	11000	8360	6130	4180
		P	10.2	9.53	8.79	8.06	7.33	6.62	5.94	5.29
	38	Q	27200	22700	18700	15100	11900	9140	6780	4760
		P	9.80	9.16	8.50	7.83	7.17	6.52	5.88	5.29
	32	Q	29500	24700	20300	16400	13000	10100	7560	5440
		P	9.23	8.68	8.10	7.52	6.93	6.35	5.78	5.24
	27	Q	31400	26300	21600	17500	14000	10900	8210	6010
		P	8.74	8.26	7.75	7.24	6.71	6.19	5.68	5.19
	15	Q	35900	30000	24800	20200	16200	12700	9780	7390
		P	7.53	7.23	6.90	6.55	6.17	5.79	5.40	5.02
SHG44e/665-4 L	50	Q	25100	20900	17100	13700	10600	7990	5780	3950
		P	12.6	11.4	10.3	9.24	8.20	7.21	6.28	5.43
	46	Q	27000	22500	18500	14800	11600	8740	6380	4440
		P	12.2	11.2	10.1	9.14	8.15	7.20	6.31	5.49
	43	Q	28400	23700	19500	15700	12300	9310	6840	4810
		P	12.0	11.0	10.0	9.04	8.09	7.18	6.32	5.52
	38	Q	30800	25800	21200	17100	13400	10300	7600	5430
		P	11.5	10.6	9.74	8.84	7.96	7.12	6.31	5.55
	32	Q	33600	28100	23200	18700	14800	11400	8500	6170
		P	10.9	10.1	9.35	8.55	7.76	6.99	6.25	5.54
	27	Q	35800	30100	24800	20100	15900	12300	9240	6780
		P	10.4	9.70	8.99	8.27	7.56	6.86	6.17	5.51
	15	Q	41100	34600	28600	23200	18500	14400	11000	8200
		P	8.98	8.51	8.03	7.52	7.01	6.48	5.94	5.40
SHG44e/665-4 SL	50	Q	25100	20800	17000	13600	10600	7940	5600	3530
		P	12.4	11.4	10.3	9.39	8.41	7.46	6.56	5.71
	46	Q	27000	22500	18400	14800	11600	8710	6250	4100
		P	12.0	11.1	10.1	9.24	8.32	7.43	6.58	5.78
	43	Q	28400	23600	19400	15600	12300	9280	6740	4530
		P	11.8	10.9	10.0	9.11	8.23	7.38	6.57	5.80
	38	Q	30700	25600	21000	17000	13400	10300	7530	5220
		P	11.3	10.4	9.67	8.85	8.05	7.26	6.51	5.80
	32	Q	33400	27900	23000	18600	14700	11400	8470	6050
		P	10.6	9.94	9.22	8.49	7.78	7.07	6.39	5.75
	27	Q	35600	29800	24600	19900	15800	12300	9250	6730
		P	10.1	9.46	8.82	8.17	7.53	6.89	6.27	5.69
	15	Q	40900	34300	28300	23100	18500	14500	11200	8390
		P	8.71	8.28	7.83	7.37	6.90	6.42	5.95	5.49
SHG44e/770-4 L	50	Q	28400	23800	19600	15800	12400	9390	6710	4310
		P	14.2	13.0	11.7	10.5	9.41	8.29	7.23	6.25
	46	Q	30600	25600	21100	17100	13500	10300	7450	4970
		P	13.8	12.7	11.5	10.4	9.32	8.26	7.26	6.33
	43	Q	32100	27000	22300	18000	14300	11000	8000	5450
		P	13.5	12.4	11.3	10.2	9.23	8.21	7.25	6.36
	38	Q	34700	29200	24100	19600	15500	12000	8890	6230
		P	13.0	12.0	10.9	9.99	9.02	8.09	7.19	6.36
	32	Q	37800	31800	26300	21400	17000	13300	9950	7160
		P	12.3	11.3	10.4	9.59	8.72	7.87	7.07	6.31
	27	Q	40300	33900	28100	22900	18300	14300	10900	7920
		P	11.6	10.8	10.0	9.22	8.43	7.67	6.93	6.23
	15	Q	46300	39000	32300	26400	21300	16800	13000	9790
		P	10.0	9.48	8.89	8.30	7.71	7.12	6.55	6.00

Relating to 20 °C suction gas temperature without liquid subcooling

Supplementary cooling or reduced suction gas temperature

vap.bock.de

SHG condensing units air-cooled single-stage
Performance data

R134a | 50 Hz

Type	Amb. temp. °C		Cooling capacity Q_o [W]						Power consumption P_e [kW]	
			Evaporating temperature °C							
			5	0	-5	-10	-15	-20	-25	-30
SHG44e/770-4 SL	50	Q	31100	25800	21000	16800	13100	9850	7020	4520
		P	14.3	13.2	12.1	11.0	9.93	8.85	7.82	6.85
	46	Q	33100	27400	22400	18000	14100	10700	7700	5120
		P	13.9	12.9	11.9	10.8	9.82	8.81	7.83	6.91
	43	Q	34600	28700	23500	18900	14800	11300	8210	5570
		P	13.6	12.6	11.6	10.7	9.71	8.75	7.81	6.93
	38	Q	37100	30800	25300	20300	16000	12300	9080	6330
		P	13.0	12.1	11.3	10.4	9.50	8.61	7.75	6.93
	32	Q	40200	33400	27400	22200	17500	13600	10200	7260
		P	12.2	11.5	10.7	9.97	9.18	8.38	7.61	6.87
	27	Q	42800	35700	29300	23700	18800	14600	11100	8060
		P	11.5	10.9	10.2	9.58	8.87	8.16	7.46	6.79
	15	Q	49200	41200	34000	27600	22100	17400	13400	10200
		P	9.84	9.46	9.03	8.57	8.08	7.57	7.05	6.54
SHG56e/850-4 L	50	Q	30800	25900	21400	17300	13700	10400	7570	5160
		P	16.1	14.5	12.9	11.5	10.0	8.68	7.36	6.10
	46	Q	33200	27900	23100	18700	14800	11400	8340	5810
		P	15.6	14.2	12.7	11.3	9.99	8.68	7.43	6.23
	43	Q	34900	29400	24400	19800	15700	12100	8910	6290
		P	15.3	13.9	12.5	11.2	9.91	8.66	7.45	6.31
	38	Q	37900	31900	26500	21500	17100	13200	9840	7070
		P	14.7	13.4	12.1	10.9	9.74	8.58	7.46	6.39
	32	Q	41300	34900	28900	23500	18700	14500	11000	7960
		P	14.0	12.8	11.6	10.5	9.48	8.43	7.41	6.43
	27	Q	44200	37300	30900	25200	20000	15600	11800	8670
		P	13.3	12.2	11.2	10.2	9.22	8.26	7.32	6.42
	15	Q	50800	42900	35600	29000	23100	18000	13800	10300
		P	11.5	10.7	9.97	9.19	8.43	7.69	6.96	6.25
SHG56e/850-4 SL	50	Q	34300	28500	23200	18600	14500	11000	7930	5390
		P	16.0	14.7	13.3	12.0	10.6	9.35	8.07	6.83
	46	Q	36500	30300	24800	19900	15600	11900	8640	5990
		P	15.6	14.3	13.1	11.8	10.5	9.34	8.12	6.94
	43	Q	38200	31800	26000	20900	16400	12500	9180	6440
		P	15.3	14.1	12.9	11.7	10.5	9.31	8.14	7.01
	38	Q	41000	34200	28000	22500	17700	13600	10100	7190
		P	14.7	13.6	12.5	11.4	10.3	9.22	8.14	7.08
	32	Q	44500	37100	30500	24600	19400	14900	11200	8090
		P	13.9	12.9	11.9	11.0	10.0	9.05	8.07	7.12
	27	Q	47400	39600	32500	26300	20800	16000	12100	8820
		P	13.1	12.3	11.4	10.6	9.74	8.85	7.97	7.10
	15	Q	54600	45700	37600	30400	24100	18700	14200	10600
		P	11.2	10.6	10.0	9.46	8.84	8.20	7.55	6.88
SHG56e/995-4 L	50	Q	38500	32100	26200	20900	16200	12100	8480	5440
		P	18.2	16.5	14.8	13.2	11.6	10.1	8.66	7.30
	46	Q	41100	34300	28000	22500	17500	13100	9370	6230
		P	17.7	16.2	14.6	13.0	11.5	10.1	8.73	7.43
	43	Q	43000	35900	29400	23600	18400	13900	10100	6820
		P	17.4	15.9	14.4	12.9	11.4	10.0	8.75	7.50
	38	Q	46200	38700	31800	25500	20000	15300	11200	7800
		P	16.7	15.3	13.9	12.6	11.2	9.99	8.75	7.57
	32	Q	50200	42000	34600	27900	22000	16800	12500	8960
		P	15.8	14.6	13.4	12.1	10.9	9.81	8.67	7.60
	27	Q	53500	44900	36900	29800	23600	18200	13600	9920
		P	15.0	13.9	12.8	11.7	10.6	9.60	8.56	7.57
	15	Q	61700	51700	42700	34600	27400	21300	16200	12200
		P	12.8	12.1	11.3	10.5	9.76	8.96	8.16	7.38

Relating to 20 °C suction gas temperature without liquid subcooling

Supplementary cooling or reduced suction gas temperature

vap.bock.de

SHG condensing units air-cooled single-stage
Performance data

R134a | 50 Hz

Type	Amb. temp. °C		Cooling capacity Q_o [W] — Evaporating temperature °C: 5	0	-5	-10	-15	-20	-25	-30	Power consumption P_e [kW]
SHG56e/995-4 SL	50	Q	38600	32200	26300	21000	16200	12100	8480	5440	
		P	18.2	16.5	14.8	13.2	11.6	10.1	8.68	7.33	
	46	Q	41200	34300	28100	22500	17500	13100	9370	6230	
		P	17.7	16.2	14.6	13.0	11.5	10.1	8.75	7.46	
	43	Q	43100	36000	29500	23600	18500	13900	10100	6820	
		P	17.4	15.9	14.4	12.9	11.4	10.1	8.77	7.53	
	38	Q	46400	38700	31800	25600	20000	15300	11200	7790	
		P	16.7	15.3	14.0	12.6	11.3	10.0	8.77	7.60	
	32	Q	50300	42100	34600	27900	22000	16800	12500	8950	
		P	15.8	14.6	13.4	12.1	10.9	9.82	8.69	7.63	
	27	Q	53600	44900	37000	29900	23600	18200	13600	9910	
		P	15.0	13.9	12.8	11.7	10.6	9.62	8.59	7.60	
	15	Q	61700	51800	42700	34600	27400	21300	16200	12200	
		P	12.9	12.1	11.3	10.5	9.78	8.98	8.19	7.42	
SHG56e/1155-4 L	50	Q	42800	35700	29300	23500	18400	13900	10000	6720	
		P	21.9	19.8	17.6	15.6	13.6	11.7	10.0	8.50	
	46	Q	45600	38200	31300	25200	19800	15000	11000	7540	
		P	21.4	19.3	17.3	15.4	13.5	11.7	10.1	8.64	
	43	Q	47700	40000	32900	26500	20800	15900	11700	8150	
		P	21.0	19.0	17.0	15.2	13.4	11.7	10.1	8.71	
	38	Q	51300	43000	35400	28600	22500	17300	12900	9170	
		P	20.2	18.3	16.5	14.8	13.1	11.5	10.1	8.76	
	32	Q	55700	46700	38500	31100	24600	19000	14300	10400	
		P	19.2	17.5	15.8	14.2	12.7	11.3	9.96	8.75	
	27	Q	59400	49800	41100	33300	26400	20400	15400	11400	
		P	18.2	16.7	15.2	13.7	12.3	11.0	9.79	8.67	
	15	Q	68300	57400	47400	38400	30500	23800	18200	13700	
		P	15.9	14.6	13.4	12.3	11.2	10.2	9.24	8.36	
SHG56e/1155-4 SL	50	Q	44500	37000	30200	24100	18800	14100	10200	6800	
		P	21.8	19.8	17.8	15.8	13.9	12.1	10.5	8.95	
	46	Q	47500	39500	32300	25800	20200	15300	11100	7620	
		P	21.3	19.3	17.4	15.6	13.8	12.1	10.5	9.09	
	43	Q	49600	41300	33800	27100	21200	16200	11800	8240	
		P	20.8	19.0	17.2	15.4	13.7	12.0	10.5	9.15	
	38	Q	53300	44500	36400	29300	23000	17600	13000	9260	
		P	20.0	18.3	16.6	15.0	13.4	11.9	10.5	9.21	
	32	Q	57800	48200	39600	31900	25100	19300	14500	10500	
		P	19.0	17.4	15.9	14.4	13.0	11.6	10.3	9.19	
	27	Q	61500	51400	42200	34000	26900	20700	15600	11500	
		P	18.1	16.7	15.3	13.9	12.6	11.3	10.2	9.12	
	15	Q	70600	59000	48500	39200	31000	24100	18400	13900	
		P	15.7	14.6	13.6	12.5	11.5	10.5	9.65	8.81	
SHG66e/1340-4 L	50	Q	47900	40200	33100	26600	20800	15800	11400	7860	
		P	24.1	21.6	19.2	16.9	14.8	12.8	11.0	9.46	
	46	Q	51200	43100	35500	28600	22500	17100	12500	8650	
		P	23.6	21.2	19.0	16.8	14.7	12.8	11.1	9.59	
	43	Q	53700	45200	37400	30200	23700	18100	13300	9290	
		P	23.2	21.0	18.8	16.7	14.7	12.8	11.1	9.66	
	38	Q	57900	48900	40500	32800	25900	19900	14700	10500	
		P	22.6	20.4	18.4	16.4	14.5	12.8	11.2	9.73	
	32	Q	63000	53300	44200	35900	28500	22000	16500	12000	
		P	21.6	19.7	17.8	16.0	14.2	12.6	11.1	9.76	
	27	Q	67300	56900	47300	38600	30700	23900	18000	13200	
		P	20.7	18.9	17.2	15.5	13.9	12.4	11.0	9.72	
	15	Q	77500	65700	54800	44800	36000	28200	21700	16400	
		P	18.2	16.8	15.5	14.2	12.9	11.7	10.5	9.44	

Relating to 20 °C suction gas temperature without liquid subcooling

Supplementary cooling and reduced suction gas temperature

Supplementary cooling or reduced suction gas temperature

vap.bock.de

SHG condensing units air-cooled single-stage
Performance data

R134a | 50 Hz

Type	Amb. temp. °C		Cooling capacity Q_o [W] — Evaporating temperature °C: 5	0	-5	-10	-15	-20	-25	-30	Power consumption P_e [kW]
SHG66e/1340-4 SL	50	Q	50000	41700	34200	27400	21300	16000	11600	7940	
		P	24.0	21.6	19.3	17.1	15.0	13.1	11.3	9.79	
	46	Q	53400	44700	36700	29400	23000	17400	12700	8740	
		P	23.5	21.2	19.1	17.0	15.0	13.1	11.4	9.91	
	43	Q	56000	46900	38500	31000	24300	18400	13500	9390	
		P	23.1	20.9	18.8	16.8	14.9	13.1	11.4	9.98	
	38	Q	60300	50600	41700	33600	26500	20200	14900	10600	
		P	22.4	20.4	18.4	16.5	14.7	13.0	11.4	10.0	
	32	Q	65500	55100	45500	36900	29100	22400	16700	12100	
		P	21.4	19.6	17.8	16.1	14.4	12.9	11.4	10.0	
	27	Q	69900	58900	48700	39500	31400	24300	18300	13400	
		P	20.4	18.8	17.2	15.6	14.1	12.7	11.3	10.0	
	15	Q	80200	67700	56200	45800	36600	28700	22000	16600	
		P	17.8	16.6	15.4	14.2	13.0	11.9	10.8	9.74	

Relating to 20 °C suction gas temperature without liquid subcooling

Supplementary cooling and reduced suction gas temperature

Supplementary cooling or reduced suction gas temperature

vap.bock.de

Operating limits

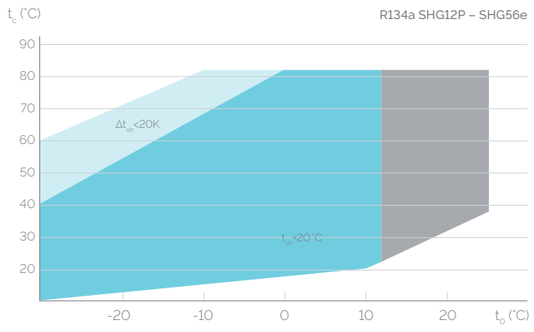

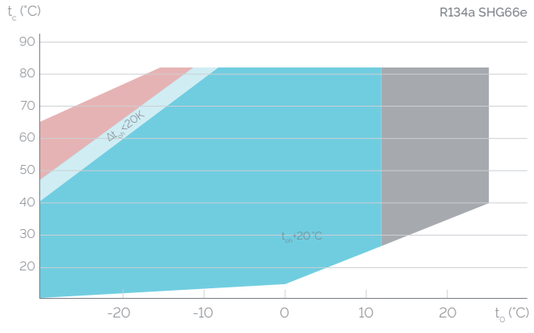

t_o Evaporating temperature (°C)
t_c Condensing temperature (°C)
Δt_{oh} Suction gas superheat (K)
t_{oh} Suction gas temperature (°C)

- Unlimited application range
- Supplementary cooling or reduced suction gas temperature (Δt_{oh}<20K)
- Supplementary cooling and reduced suction gas temperature (Δt_{oh}<20K)
- Motor version -S- (more powerful motor)

Max. permissible operating pressure (LP/HP) [1]: 19/28 bar

[1] LP = low pressure, HP = high pressure

SHG condensing units air-cooled single-stage
Performance data

R404A / R507 | 50 Hz

Type	Amb. temp. °C		Cooling capacity Q_o [W] Evaporating temperature °C: 5	0	-5	-10	-15	-20	-25	-30
SHG12P/60-4 SL	50	Q	-	2830	2340	1910	1530	1200	909	671
		P	-	1.94	1.80	1.65	1.50	1.35	1.20	1.07
	46	Q	3680	3090	2570	2100	1690	1330	1020	755
		P	2.02	1.90	1.76	1.63	1.49	1.34	1.20	1.07
	43	Q	3910	3300	2750	2250	1820	1430	1100	820
		P	1.97	1.86	1.74	1.61	1.47	1.34	1.20	1.07
	38	Q	4310	3650	3050	2510	2030	1610	1250	933
		P	1.89	1.80	1.69	1.57	1.45	1.32	1.19	1.07
	32	Q	4810	4080	3420	2830	2300	1830	1430	1080
		P	1.78	1.70	1.61	1.51	1.40	1.29	1.18	1.07
	27	Q	5230	4450	3750	3100	2530	2020	1580	1210
		P	1.68	1.62	1.54	1.45	1.36	1.26	1.16	1.06
	15	Q	6310	5400	4560	3800	3120	2510	1990	1530
		P	1.37	1.35	1.32	1.27	1.22	1.15	1.08	1.01
SHG12P/75-4 L	50	Q	-	-	-	2500	2050	1650	1300	1010
		P	-	-	-	2.11	1.92	1.74	1.55	1.38
	46	Q	-	-	3280	2730	2230	1800	1420	1100
		P	-	-	2.25	2.07	1.89	1.71	1.53	1.36
	43	Q	-	-	3480	2900	2380	1920	1520	1180
		P	-	-	2.20	2.03	1.86	1.69	1.52	1.35
	38	Q		-	3820	3190	2620	2120	1680	1310
		P	-	-	2.12	1.97	1.81	1.65	1.49	1.34
	32	Q	-	-	4250	3560	2930	2380	1890	1480
		P	-	-	2.02	1.88	1.74	1.60	1.45	1.31
	27	Q	-	-	4620	3880	3200	2610	2080	1630
		P	-	-	1.92	1.80	1.68	1.55	1.42	1.28
	15	Q	-	-	5580	4700	3910	3200	2570	2030
		P	-	-	1.64	1.57	1.49	1.40	1.30	1.20
SHG12P/75-4 SL	50	Q	-	-	2950	2450	2000	1600	1260	956
		P	-	-	2.24	2.05	1.86	1.67	1.49	1.32
	46	Q	4460	3810	3210	2670	2190	1760	1380	1060
		P	2.55	2.39	2.21	2.03	1.85	1.67	1.49	1.32
	43	Q	4730	4040	3410	2840	2330	1880	1480	1140
		P	2.51	2.35	2.18	2.01	1.84	1.66	1.49	1.32
	38	Q	5190	4450	3760	3140	2580	2090	1650	1270
		P	2.42	2.28	2.13	1.97	1.80	1.64	1.47	1.31
	32	Q	5770	4950	4200	3520	2900	2350	1860	1440
		P	2.29	2.17	2.03	1.89	1.75	1.60	1.44	1.29
	27	Q	6270	5390	4580	3840	3180	2580	2050	1600
		P	2.16	2.06	1.94	1.82	1.69	1.55	1.41	1.28
	15	Q	7550	6520	5570	4690	3900	3190	2560	2010
		P	1.77	1.72	1.66	1.59	1.51	1.42	1.33	1.23
SHG12P/90-4 L	50	Q	-	-	-	2810	2300	1850	1450	1110
		P	-	-	-	2.43	2.18	1.94	1.71	1.49
	46	Q	-	-	3680	3070	2520	2030	1600	1230
		P	-	-	2.63	2.38	2.14	1.91	1.69	1.48
	43	Q	-	-	3910	3270	2690	2170	1720	1320
		P	-	-	2.57	2.33	2.11	1.89	1.68	1.48
	38	Q	-	-	4310	3610	2980	2420	1920	1480
		P	-	-	2.48	2.26	2.05	1.85	1.65	1.47
	32	Q	-	-	4800	4040	3340	2720	2170	1690
		P	-	-	2.36	2.16	1.98	1.80	1.62	1.45
	27	Q	-	-	5230	4410	3660	2990	2390	1870
		P	-	-	2.25	2.08	1.91	1.75	1.59	1.43
	15	Q	-	-	6310	5350	4470	3670	2960	2350
		P	-	-	1.96	1.84	1.73	1.61	1.49	1.37

Relating to 20 °C suction gas temperature without liquid subcooling

Supplementary cooling or reduced suction gas temperature

vap.bock.de

SHG condensing units air-cooled single-stage
Performance data

R404A / R507 | 50 Hz

Type	Amb. temp. °C		Cooling capacity Q_o [W] Evaporating temperature °C: 5	0	-5	-10	-15	-20	-25	-30
SHG12P/90-4 SL	50	Q	-	-	-	-	2350	1900	1510	1170
		P	-	-	-	-	2.25	2.02	1.79	1.57
	46	Q	-	4380	3720	3110	2570	2080	1660	1290
		P	-	2.92	2.68	2.44	2.21	1.98	1.77	1.56
	43	Q	5410	4650	3950	3320	2740	2220	1770	1380
		P	3.08	2.85	2.62	2.40	2.18	1.96	1.75	1.55
	38	Q	5940	5120	4360	3660	3030	2460	1960	1530
		P	2.94	2.73	2.53	2.32	2.12	1.92	1.72	1.53
	32	Q	6610	5700	4860	4090	3390	2760	2210	1730
		P	2.76	2.59	2.41	2.22	2.04	1.86	1.68	1.51
	27	Q	7180	6210	5300	4470	3710	3030	2420	1900
		P	2.61	2.45	2.30	2.14	1.97	1.81	1.65	1.49
	15	Q	8640	7500	6430	5440	4530	3720	3000	2370
		P	2.20	2.10	2.00	1.90	1.78	1.66	1.54	1.42
SHG12P/110-4 L	50	Q	-	-	-	-	2680	2190	1750	1370
		P	-	-	-	-	2.59	2.29	2.01	1.75
	46	Q	-	-	4160	3530	2940	2410	1940	1520
		P	-	-	3.16	2.85	2.55	2.26	1.99	1.74
	43	Q	-	-	4440	3760	3150	2580	2080	1630
		P	-	-	3.10	2.81	2.52	2.24	1.98	1.73
	38	Q	-	-	4910	4170	3490	2870	2310	1820
		P	-	-	3.01	2.73	2.46	2.20	1.95	1.72
	32	Q	-	-	5490	4670	3920	3230	2610	2060
		P	-	-	2.88	2.63	2.38	2.14	1.92	1.70
	27	Q	-	-	5980	5100	4280	3530	2860	2270
		P	-	-	2.76	2.53	2.31	2.09	1.88	1.67
	15	Q	-	-	7210	6160	5190	4300	3500	2790
		P	-	-	2.40	2.24	2.07	1.91	1.75	1.58
SHG12P/110-4 SL	50	Q	-	-	-	-	2600	2120	1690	1320
		P	-	-	-	-	2.59	2.29	2.00	1.73
	46	Q	-	-	4080	3450	2870	2340	1880	1460
		P	-	-	3.14	2.84	2.55	2.26	1.99	1.73
	43	Q	-	5090	4360	3690	3080	2520	2020	1570
		P	-	3.36	3.07	2.79	2.51	2.24	1.98	1.73
	38	Q	6510	5650	4850	4110	3430	2810	2250	1760
		P	3.49	3.22	2.96	2.70	2.44	2.19	1.95	1.72
	32	Q	7290	6340	5450	4620	3860	3170	2550	2000
		P	3.28	3.04	2.81	2.58	2.35	2.13	1.91	1.69
	27	Q	7960	6930	5960	5060	4230	3480	2800	2200
		P	3.10	2.89	2.68	2.48	2.27	2.06	1.86	1.66
	15	Q	9610	8380	7230	6150	5150	4240	3430	2720
		P	2.63	2.49	2.34	2.19	2.04	1.88	1.72	1.56
SHG22e/125-4 L	50	Q	-	-	-	-	-	2390	1850	1380
		P	-	-	-	-	-	2.34	2.04	1.76
	46	Q	-	-	-	4050	3330	2670	2070	1550
		P	-	-	-	2.93	2.63	2.33	2.05	1.77
	43	Q	-	-	5150	4350	3580	2880	2250	1690
		P	-	-	3.21	2.91	2.62	2.33	2.05	1.78
	38	Q	-	-	5720	4840	4010	3240	2540	1920
		P	-	-	3.14	2.86	2.58	2.30	2.04	1.78
	32	Q	-	-	6410	5440	4530	3680	2900	2210
		P	-	-	3.04	2.78	2.52	2.26	2.01	1.77
	27	Q	-	-	6990	5950	4970	4060	3220	2470
		P	-	-	2.93	2.69	2.45	2.22	1.98	1.76
	15	Q	-	-	8440	7230	6090	5030	4060	3200
		P	-	-	2.59	2.41	2.24	2.06	1.89	1.71

Relating to 20 °C suction gas temperature without liquid subcooling

Supplementary cooling or reduced suction gas temperature

vap.bock.de

SHG condensing units air-cooled single-stage
Performance data

R404A / R507 | 50 Hz

Type	Amb. temp. °C		Cooling capacity Q_o [W] Evaporating temperature °C: 5	0	-5	-10	-15	-20	-25	-30	Power consumption P_e [kW]
SHG22e/125-4 SL	50	Q	-	-	-	-	-	2320	1790	1330	
		P	-	-	-	-	-	2.34	2.07	1.81	
	46	Q	-	-	4930	4130	3380	2700	2100	1570	
		P	-	-	3.21	2.91	2.62	2.34	2.07	1.82	
	43	Q	-	6310	5380	4520	3710	2970	2310	1730	
		P	-	3.44	3.16	2.88	2.60	2.33	2.07	1.82	
	38	Q	8200	7110	6080	5110	4210	3380	2640	1990	
		P	3.57	3.33	3.07	2.81	2.55	2.29	2.04	1.80	
	32	Q	9190	7980	6830	5750	4740	3830	3000	2280	
		P	3.37	3.16	2.94	2.71	2.47	2.24	2.00	1.77	
	27	Q	9940	8630	7390	6230	5150	4170	3280	2500	
		P	3.19	3.01	2.82	2.62	2.40	2.19	1.97	1.75	
	15	Q	11600	10100	8590	7260	6030	4920	3910	3030	
		P	2.74	2.64	2.53	2.39	2.24	2.07	1.90	1.71	
SHG22e/160-4 L	50	Q	-	-	-	-	-	-	2240	1690	
		P	-	-	-	-	-	-	2.48	2.14	
	46	Q	-	-	-	-	4050	3290	2590	1970	
		P	-	-	-	-	3.22	2.85	2.50	2.17	
	43	Q	-	-	6250	5320	4430	3600	2850	2170	
		P	-	-	3.94	3.56	3.19	2.84	2.50	2.17	
	38	Q	-	-	7070	6020	5030	4100	3250	2490	
		P	-	-	3.83	3.48	3.13	2.80	2.48	2.17	
	32	Q	-	-	7990	6810	5700	4660	3710	2860	
		P	-	-	3.67	3.35	3.04	2.74	2.44	2.15	
	27	Q	-	-	8690	7410	6210	5090	4070	3150	
		P	-	-	3.53	3.24	2.95	2.67	2.40	2.12	
	15	Q	-	-	10200	8700	7300	6010	4830	3780	
		P	-	-	3.16	2.94	2.73	2.50	2.28	2.05	
SHG22e/160-4 SL	50	Q	-	-	-	-	-	-	2090	1570	
		P	-	-	-	-	-	-	2.43	2.10	
	46	Q	-	-	-	-	3920	3150	2450	1840	
		P	-	-	-	-	3.16	2.80	2.45	2.12	
	43	Q	-	-	6210	5230	4320	3470	2700	2030	
		P	-	-	3.86	3.50	3.14	2.79	2.45	2.12	
	38	Q	9450	8240	7080	5970	4930	3970	3100	2340	
		P	4.44	4.11	3.78	3.44	3.09	2.76	2.43	2.11	
	32	Q	10800	9340	8020	6770	5600	4520	3550	2690	
		P	4.24	3.94	3.64	3.33	3.01	2.70	2.39	2.09	
	27	Q	11700	10200	8740	7390	6120	4950	3900	2970	
		P	4.05	3.78	3.51	3.22	2.93	2.64	2.35	2.07	
	15	Q	13800	12000	10300	8700	7230	5890	4680	3620	
		P	3.55	3.36	3.16	2.95	2.73	2.50	2.27	2.03	
SHG22e/190-4 L	50	Q	-	-	-	-	-	-	3030	2340	
		P	-	-	-	-	-	-	3.48	3.01	
	46	Q	-	-	7520	6350	5280	4310	3450	2680	
		P	-	-	5.33	4.85	4.38	3.91	3.45	3.01	
	43	Q	-	-	8150	6890	5730	4690	3750	2920	
		P	-	-	5.20	4.75	4.30	3.86	3.43	3.01	
	38	Q	-	-	9160	7750	6460	5290	4240	3310	
		P	-	-	4.98	4.58	4.17	3.77	3.38	2.99	
	32	Q	-	-	10400	8750	7300	5980	4800	3770	
		P	-	-	4.72	4.36	4.01	3.65	3.30	2.95	
	27	Q	-	-	11300	9540	7960	6540	5260	4130	
		P	-	-	4.49	4.18	3.86	3.54	3.22	2.90	
	15	Q	-	-	13400	11400	9480	7800	6300	4980	
		P	-	-	3.97	3.75	3.51	3.27	3.02	2.76	

Relating to 20 °C suction gas temperature without liquid subcooling

Supplementary cooling or reduced suction gas temperature

vap.bock.de

SHG condensing units air-cooled single-stage
Performance data

R404A / R507 | 50 Hz

Type	Amb. temp. °C		Cooling capacity Q_o [W] Evaporating temperature °C: 5	0	-5	-10	-15	-20	-25	-30	Power consumption P_e [kW]
SHG22e/190-4 SL	50	Q	-	-	-	-	-	3750	2970	2280	
		P	-	-	-	-	-	3.85	3.40	2.96	
	46	Q	-	-	7580	6380	5280	4290	3420	2640	
		P	-	-	5.20	4.73	4.27	3.83	3.39	2.98	
	43	Q	-	9630	8220	6930	5750	4680	3730	2900	
		P	-	5.55	5.10	4.66	4.22	3.79	3.38	2.98	
	38	Q	12500	10900	9250	7810	6490	5300	4240	3300	
		P	5.72	5.32	4.91	4.51	4.11	3.72	3.33	2.96	
	32	Q	14100	12200	10500	8810	7330	6000	4810	3770	
		P	5.38	5.03	4.67	4.32	3.96	3.61	3.26	2.92	
	27	Q	15300	13300	11400	9610	8010	6560	5270	4140	
		P	5.08	4.77	4.46	4.15	3.83	3.51	3.18	2.87	
	15	Q	18100	15700	13500	11500	9550	7850	6340	5010	
		P	4.35	4.15	3.94	3.72	3.49	3.25	2.99	2.74	
SHG34e/215-4 L	50	Q	-	-	-	-	-	3560	2720	2000	
		P	-	-	-	-	-	3.77	3.26	2.78	
	46	Q	-	-	-	6410	5230	4150	3190	2350	
		P	-	-	-	4.87	4.34	3.82	3.31	2.83	
	43	Q	-	-	8440	7050	5760	4580	3520	2600	
		P	-	-	5.37	4.86	4.34	3.83	3.33	2.85	
	38	Q	-	-	9620	8050	6590	5250	4060	3010	
		P	-	-	5.27	4.78	4.29	3.80	3.31	2.85	
	32	Q	-	-	11000	9180	7530	6030	4680	3500	
		P	-	-	5.08	4.63	4.18	3.72	3.26	2.83	
	27	Q	-	-	12100	10100	8290	6650	5190	3910	
		P	-	-	4.88	4.47	4.05	3.63	3.21	2.80	
	15	Q	-	-	14500	12200	10100	8130	6430	4960	
		P	-	-	4.33	4.04	3.73	3.41	3.09	2.78	
SHG34e/215-4 SL	50	Q	-	-	-	-	-	3550	2750	2050	
		P	-	-	-	-	-	3.83	3.34	2.88	
	46	Q	-	-	-	6400	5220	4160	3230	2430	
		P	-	-	-	4.87	4.35	3.86	3.39	2.94	
	43	Q	-	10100	8460	7050	5760	4610	3590	2700	
		P	-	5.86	5.33	4.83	4.34	3.87	3.41	2.98	
	38	Q	13300	11500	9690	8090	6630	5320	4160	3150	
		P	6.18	5.68	5.20	4.74	4.29	3.86	3.43	3.01	
	32	Q	15200	13100	11100	9280	7630	6140	4820	3660	
		P	5.87	5.44	5.02	4.61	4.21	3.81	3.41	3.02	
	27	Q	16700	14400	12200	10300	8420	6790	5340	4060	
		P	5.60	5.22	4.85	4.48	4.12	3.75	3.38	3.00	
	15	Q	20000	17300	14700	12400	10200	8230	6490	4950	
		P	4.90	4.64	4.38	4.11	3.83	3.53	3.22	2.89	
SHG34e/255-4 L	50	Q	-	-	-	-	-	-	3340	2520	
		P	-	-	-	-	-	-	3.92	3.33	
	46	Q	-	-	-	-	6130	4950	3890	2950	
		P	-	-	-	-	5.23	4.58	3.97	3.40	
	43	Q	-	-	9580	8110	6720	5450	4290	3270	
		P	-	-	6.52	5.85	5.21	4.58	3.99	3.43	
	38	Q	-	-	10900	9240	7690	6260	4950	3790	
		P	-	-	6.37	5.75	5.14	4.55	3.99	3.45	
	32	Q	-	-	12500	10600	8810	7190	5730	4420	
		P	-	-	6.13	5.56	5.01	4.47	3.94	3.44	
	27	Q	-	-	13700	11600	9700	7950	6350	4930	
		P	-	-	5.89	5.38	4.87	4.37	3.88	3.42	
	15	Q	-	-	16400	14000	11800	9660	7790	6130	
		P	-	-	5.24	4.86	4.47	4.09	3.72	3.34	

Relating to 20 °C suction gas temperature without liquid subcooling

Supplementary cooling or reduced suction gas temperature

vap.bock.de

SHG condensing units air-cooled single-stage
Performance data

R404A / R507 | 50 Hz

Type	Amb. temp. °C		Cooling capacity Q_o [W] Evaporating temperature °C: 5	0	-5	-10	-15	-20	-25	-30	Power consumption P_e [kW]
SHG34e/255-4 SL	50	Q	-	-	-	-	-	-	3230	2420	
		P	-	-	-	-	-	-	3.91	3.32	
	46	Q	-	-	-	-	6030	4830	3760	2830	
		P	-	-	-	-	5.17	4.53	3.93	3.36	
	43	Q	-	-	9610	8070	6640	5330	4160	3140	
		P	-	-	6.42	5.77	5.13	4.52	3.94	3.39	
	38	Q	14800	12900	11000	9250	7620	6140	4810	3650	
		P	7.47	6.86	6.25	5.65	5.06	4.48	3.93	3.41	
	32	Q	16900	14700	12600	10700	8770	7080	5580	4260	
		P	7.12	6.58	6.03	5.48	4.94	4.41	3.90	3.42	
	27	Q	18600	16200	13900	11700	9680	7840	6200	4760	
		P	6.81	6.32	5.82	5.32	4.82	4.33	3.86	3.41	
	15	Q	22400	19500	16800	14200	11800	9570	7620	5920	
		P	6.02	5.65	5.26	4.87	4.48	4.09	3.70	3.33	
SHG34e/315-4 L	50	Q	-	-	-	-	-	-	-	3090	
		P	-	-	-	-	-	-	-	3.99	
	46	Q	-	-	-	-	-	6000	4780	3660	
		P	-	-	-	-	-	5.59	4.81	4.08	
	43	Q	-	-	-	9480	8010	6600	5280	4070	
		P	-	-	-	7.20	6.37	5.58	4.83	4.12	
	38	Q	-	-	12600	10900	9170	7570	6080	4710	
		P	-	-	7.86	7.05	6.27	5.53	4.82	4.16	
	32	Q	-	-	14400	12400	10500	8670	6980	5450	
		P	-	-	7.57	6.83	6.11	5.43	4.78	4.16	
	27	Q	-	-	15900	13700	11600	9540	7700	6030	
		P	-	-	7.30	6.61	5.95	5.32	4.71	4.13	
	15	Q	-	-	19100	16500	14000	11600	9360	7400	
		P	-	-	6.58	6.03	5.49	4.98	4.48	4.00	
SHG34e/315-4 SL	50	Q	-	-	-	-	-	5690	4460	3350	
		P	-	-	-	-	-	5.88	5.12	4.39	
	46	Q	-	-	-	9590	7960	6470	5100	3870	
		P	-	-	-	7.41	6.65	5.90	5.18	4.47	
	43	Q	-	-	12300	10400	8650	7040	5570	4250	
		P	-	-	8.10	7.34	6.61	5.89	5.19	4.52	
	38	Q	18400	16100	13900	11800	9770	7970	6340	4880	
		P	9.38	8.63	7.91	7.20	6.51	5.84	5.19	4.55	
	32	Q	20800	18200	15700	13300	11100	9060	7230	5610	
		P	8.98	8.29	7.63	6.98	6.34	5.73	5.12	4.54	
	27	Q	22700	19900	17200	14600	12200	9950	7960	6200	
		P	8.62	7.98	7.36	6.76	6.17	5.60	5.04	4.49	
	15	Q	27300	23900	20600	17500	14700	12000	9650	7570	
		P	7.66	7.13	6.63	6.14	5.67	5.20	4.74	4.29	
SHG34e/380-4 L	50	Q	-	-	-	-	-	-	5490	4260	
		P	-	-	-	-	-	-	6.29	5.35	
	46	Q	-	-	-	-	9320	7690	6190	4830	
		P	-	-	-	-	8.29	7.27	6.31	5.41	
	43	Q	-	-	-	12000	10100	8320	6710	5260	
		P	-	-	-	9.25	8.22	7.24	6.31	5.43	
	38	Q	-	-	15700	13500	11400	9370	7570	5960	
		P	-	-	10.0	9.03	8.06	7.14	6.27	5.44	
	32	Q	-	-	17700	15200	12800	10700	8600	6800	
		P	-	-	9.67	8.73	7.83	6.98	6.17	5.40	
	27	Q	-	-	19300	16600	14100	11700	9460	7500	
		P	-	-	9.31	8.44	7.61	6.81	6.06	5.34	
	15	Q	-	-	23300	20100	17000	14200	11600	9210	
		P	-	-	8.39	7.68	6.99	6.34	5.72	5.12	

Relating to 20 °C suction gas temperature without liquid subcooling

Supplementary cooling or reduced suction gas temperature

vap.bock.de

SHG condensing units air-cooled single-stage
Performance data

R404A / R507 | 50 Hz

Type	Amb. temp. °C		Cooling capacity Q_o [W] Evaporating temperature °C: 5	0	-5	-10	-15	-20	-25	-30	Power consumption P_e [kW]
SHG34e/380-4 SL	50	Q	-	-	-	-	-	-	5920	4540	
		P	-	-	-	-	-	-	6.23	5.33	
	46	Q	-	-	-	12100	10200	8320	6660	5150	
		P	-	-	-	9.06	8.09	7.15	6.25	5.39	
	43	Q	-	-	15300	13100	11000	8980	7210	5610	
		P	-	-	9.91	8.95	8.02	7.12	6.24	5.41	
	38	Q	22500	19700	17100	14600	12300	10100	8120	6360	
		P	11.4	10.5	9.64	8.74	7.86	7.01	6.19	5.40	
	32	Q	25300	22200	19200	16400	13800	11400	9190	7240	
		P	10.9	10.1	9.26	8.43	7.62	6.83	6.07	5.35	
	27	Q	27600	24200	21000	18000	15100	12500	10100	7950	
		P	10.4	9.69	8.90	8.13	7.38	6.66	5.95	5.28	
	15	Q	33100	29000	25200	21500	18100	14900	12100	9550	
		P	9.24	8.59	7.96	7.34	6.74	6.16	5.61	5.07	
SHG44e/475-4 L	50	Q	-	-	-	-	-	-	-	5600	
		P	-	-	-	-	-	-	-	6.77	
	46	Q	-	-	-	-	12100	10100	8140	6380	
		P	-	-	-	-	9.88	8.75	7.68	6.67	
	43	Q	-	-	-	15600	13200	10900	8840	6960	
		P	-	-	-	10.8	9.74	8.64	7.60	6.61	
	38	Q	-	-	20400	17500	14800	12300	9990	7910	
		P	-	-	11.7	10.5	9.50	8.46	7.47	6.52	
	32	Q	-	-	23000	19800	16700	13900	11400	9030	
		P	-	-	11.2	10.2	9.20	8.24	7.32	6.43	
	27	Q	-	28900	25200	21600	18300	15300	12500	9940	
		P	-	11.8	10.8	9.86	8.94	8.04	7.18	6.34	
	15	Q	-	34700	30200	25900	22000	18300	15000	12100	
		P	-	10.4	9.68	8.92	8.18	7.46	6.76	6.06	
SHG44e/475-4 SL	50	Q	-	-	-	-	12300	9980	7920	6080	
		P	-	-	-	-	10.8	9.77	8.74	7.76	
	46	Q	-	-	19700	16600	13800	11200	8900	6880	
		P	-	-	12.7	11.7	10.6	9.62	8.63	7.67	
	43	Q	28900	24900	21200	17800	14800	12100	9630	7470	
		P	14.5	13.5	12.5	11.5	10.5	9.52	8.55	7.61	
	38	Q	32000	27600	23600	19900	16500	13500	10900	8450	
		P	13.9	13.0	12.1	11.1	10.2	9.33	8.42	7.53	
	32	Q	35700	30800	26300	22200	18500	15200	12300	9610	
		P	13.2	12.4	11.5	10.7	9.93	9.09	8.26	7.43	
	27	Q	38700	33400	28600	24200	20200	16600	13400	10600	
		P	12.5	11.8	11.1	10.3	9.62	8.86	8.10	7.33	
	15	Q	45600	39500	33800	28700	24000	19800	16000	12800	
		P	10.6	10.1	9.72	9.23	8.71	8.16	7.59	6.99	
SHG44e/565-4 L	50	Q	-	-	-	-	-	-	-	-	
		P	-	-	-	-	-	-	-	-	
	46	Q	-	-	-	-	-	11700	9550	7610	
		P	-	-	-	-	-	10.3	9.02	7.79	
	43	Q	-	-	-	-	15000	12600	10400	8290	
		P	-	-	-	-	11.6	10.2	8.92	7.71	
	38	Q	-	-	22700	19700	16900	14200	11700	9390	
		P	-	-	14.1	12.7	11.3	10.0	8.77	7.60	
	32	Q	-	-	25700	22300	19100	16100	13300	10700	
		P	-	-	13.6	12.2	10.9	9.75	8.59	7.49	
	27	Q	-	-	28200	24500	20900	17600	14600	11800	
		P	-	-	13.1	11.8	10.6	9.52	8.43	7.39	
	15	Q	-	38700	34000	29400	25200	21200	17500	14200	
		P	-	12.9	11.8	10.8	9.83	8.88	7.97	7.09	

Relating to 20 °C suction gas temperature without liquid subcooling

Supplementary cooling or reduced suction gas temperature

vap.bock.de

SHG condensing units air-cooled single-stage
Performance data

R404A / R507 | 50 Hz

Type	Amb. temp. °C		Cooling capacity Q_o [W] Evaporating temperature °C: 5	0	-5	-10	-15	-20	-25	-30	Power consumption P_e [kW]
SHG44e/565-4 SL	50	Q	-	-	-	-	-	12000	9580	7430	
		P	-	-	-	-	-	11.3	10.0	8.88	
	46	Q	-	-	23100	19600	16300	13400	10800	8390	
		P	-	-	14.9	13.6	12.3	11.1	9.92	8.77	
	43	Q	-	29000	24900	21000	17600	14500	11700	9100	
		P	-	15.9	14.6	13.4	12.2	10.9	9.82	8.70	
	38	Q	37200	32200	27600	23400	19600	16200	13100	10300	
		P	16.5	15.3	14.2	13.0	11.9	10.7	9.67	8.60	
	32	Q	41500	36000	30900	26200	22000	18100	14700	11600	
		P	15.6	14.6	13.5	12.5	11.5	10.5	9.48	8.49	
	27	Q	45000	39100	33500	28500	23900	19700	16000	12700	
		P	14.8	13.9	13.0	12.1	11.1	10.2	9.30	8.38	
	15	Q	53100	46100	39700	33700	28300	23400	19100	15300	
		P	12.7	12.0	11.4	10.8	10.1	9.44	8.72	7.99	
SHG44e/665-4 L	50	Q	-	-	-	-	-	-	10200	7890	
		P	-	-	-	-	-	-	11.4	10.0	
	46	Q	-	-	-	-	17400	14400	11600	8990	
		P	-	-	-	-	14.3	12.7	11.3	9.91	
	43	Q	-	-	26300	22400	18900	15600	12600	9790	
		P	-	-	17.2	15.6	14.1	12.6	11.1	9.83	
	38	Q	-	-	29500	25200	21200	17500	14200	11200	
		P	-	-	16.7	15.2	13.7	12.3	11.0	9.71	
	32	Q	-	-	33300	28400	23900	19800	16100	12800	
		P	-	-	16.0	14.6	13.3	12.0	10.7	9.57	
	27	Q	-	42000	36300	31000	26100	21700	17700	14000	
		P	-	16.7	15.4	14.1	12.9	11.7	10.5	9.45	
	15	Q	-	50300	43500	37200	31400	26100	21300	17100	
		P	-	14.7	13.7	12.7	11.8	10.8	9.96	9.02	
SHG44e/665-4 SL	50	Q	-	-	-	-	-	-	10400	7980	
		P	-	-	-	-	-	-s	11.4	10.0	
	46	Q	-	-	-	21400	17900	14700	11800	9090	
		P	-	-	-	15.8	14.2	12.7	11.3	9.93	
	43	Q	-	-	27200	23100	19300	15900	12800	9910	
		P	-	-	17.1	15.5	14.0	12.5	11.1	9.85	
	38	Q	40600	35300	30400	25800	21700	17800	14400	11300	
		P	19.5	18.0	16.5	15.1	13.7	12.3	11.0	9.73	
	32	Q	45600	39700	34200	29100	24400	20200	16300	12900	
		P	18.5	17.1	15.8	14.5	13.2	12.0	10.7	9.59	
	27	Q	49600	43300	37300	31800	26700	22100	17900	14200	
		P	17.6	16.4	15.2	14.0	12.8	11.7	10.5	9.47	
	15	Q	59100	51500	44500	37900	31900	26500	21600	17300	
		P	15.3	14.4	13.5	12.6	11.7	10.8	9.94	9.03	
SHG44e/770-4 L	50	Q	-	-	-	-	-	-	12100	9410	
		P	-	-	-	-	-	-	13.0	11.3	
	46	Q	-	-	-	-	20200	16800	13600	10700	
		P	-	-	-	-	16.3	14.5	12.8	11.2	
	43	Q	-	-	-	25800	21800	18100	14800	11700	
		P	-	-	-	17.9	16.1	14.3	12.6	11.1	
	38	Q	-	-	33800	29000	24500	20400	16600	13200	
		P	-	-	19.2	17.4	15.7	14.0	12.4	10.9	
	32	Q	-	-	38100	32700	27600	23000	18800	15000	
		P	-	-	18.4	16.8	15.2	13.7	12.2	10.8	
	27	Q	-	47900	41600	35700	30200	25200	20600	16500	
		P	-	19.3	17.7	16.2	14.8	13.3	12.0	10.6	
	15	Q	-	57200	49700	42700	36100	30100	24700	19900	
		P	-	17.1	15.8	14.7	13.5	12.4	11.3	10.2	

Relating to 20 °C suction gas temperature without liquid subcooling

Supplementary cooling or reduced suction gas temperature

vap.bock.de

SHG condensing units air-cooled single-stage
Performance data

R404A / R507 | 50 Hz

Type	Amb. temp. °C		Cooling capacity Q_o [W] Evaporating temperature °C: 5	0	-5	-10	-15	-20	-25	-30	Power consumption P_e [kW]
SHG44e/770-4 SL	50	Q	-	-	-	25200	20800	16900	13500	10400	
		P	-	-	-	18.6	16.8	15.0	13.4	11.8	
	46	Q	-	38500	32700	27500	22800	18600	14900	11500	
		P	-	21.7	20.0	18.2	16.5	14.8	13.2	11.6	
	43	Q	47600	40900	34800	29200	24300	19800	15900	12400	
		P	22.9	21.3	19.6	17.9	16.3	14.7	13.1	11.6	
	38	Q	52100	44800	38200	32200	26800	21900	17600	13800	
		P	22.0	20.5	19.0	17.4	15.9	14.4	12.9	11.4	
	32	Q	57600	49700	42400	35800	29800	24500	19800	15600	
		P	20.8	19.5	18.1	16.8	15.4	14.0	12.6	11.3	
	27	Q	62200	53800	46000	38900	32400	26700	21600	17100	
		P	19.7	18.5	17.3	16.1	14.9	13.7	12.4	11.1	
	15	Q	73800	63900	54800	46400	38900	32100	26100	20900	
		P	16.4	15.7	15.0	14.2	13.3	12.4	11.5	10.5	
SHG56e/850-4 L	50	Q	-	-	-	-	-	-	-	10400	
		P	-	-	-	-	-	-	-	12.3	
	46	Q	-	-	-	-	-	18100	14900	11800	
		P	-	-	-	-	-	15.9	13.9	12.1	
	43	Q	-	-	-	27500	23500	19600	16100	12800	
		P	-	-	-	19.7	17.7	15.7	13.8	12.0	
	38	Q	-	-	35900	31000	26400	22100	18100	14500	
		P	-	-	21.2	19.2	17.2	15.4	13.6	11.9	
	32	Q	-	-	40500	35000	29800	24900	20500	16400	
		P	-	-	20.4	18.5	16.7	15.0	13.3	11.7	
	27	Q	-	50700	44300	38200	32500	27200	22400	18000	
		P	-	21.5	19.6	17.9	16.2	14.6	13.0	11.5	
	15	Q	-	60900	53200	45800	39000	32700	26900	21700	
		P	-	19.1	17.7	16.3	14.9	13.6	12.3	11.0	
SHG56e/850-4 SL	50	Q	-	-	-	-	22900	18700	14900	11600	
		P	-	-	-	-	18.3	16.4	14.5	12.8	
	46	Q	-	-	35700	30100	25000	20500	16400	12800	
		P	-	-	21.8	19.9	18.0	16.1	14.3	12.6	
	43	Q	51500	44400	37900	32000	26600	21800	17600	13700	
		P	25.1	23.3	21.4	19.6	17.7	16.0	14.2	12.5	
	38	Q	56300	48700	41600	35200	29400	24100	19500	15300	
		P	24.2	22.5	20.7	19.0	17.3	15.7	14.0	12.4	
	32	Q	62300	53900	46200	39100	32700	26900	21800	17200	
		P	22.9	21.4	19.9	18.3	16.8	15.3	13.7	12.2	
	27	Q	67300	58300	50000	42400	35500	29300	23800	18900	
		P	21.7	20.4	19.0	17.7	16.3	14.9	13.5	12.1	
	15	Q	79800	69300	59500	50600	42500	35100	28700	22900	
		P	18.4	17.5	16.6	15.6	14.6	13.6	12.5	11.4	
SHG56e/995-4 L	50	Q	-	-	-	-	-	20500	16200	12300	
		P	-	-	-	-	-	18.2	15.8	13.4	
	46	Q	-	-	-	33400	27700	22600	17900	13700	
		P	-	-	-	22.9	20.5	18.2	15.9	13.6	
	43	Q	-	-	42000	35600	29600	24200	19200	14800	
		P	-	-	24.9	22.6	20.4	18.1	15.9	13.7	
	38	Q	-	-	46400	39400	32900	26900	21500	16700	
		P	-	-	24.3	22.1	20.0	17.9	15.8	13.7	
	32	Q	-	60000	51700	44000	36800	30300	24300	19000	
		P	-	25.4	23.3	21.3	19.3	17.4	15.5	13.6	
	27	Q	-	65200	56300	48000	40200	33100	26700	21000	
		P	-	24.4	22.4	20.5	18.7	16.9	15.1	13.4	
	15	Q	-	78000	67500	57700	48600	40200	32600	25900	
		P	-	21.7	20.0	18.4	16.9	15.5	14.2	12.9	

Relating to 20 °C suction gas temperature without liquid subcooling

Supplementary cooling or reduced suction gas temperature

vap.bock.de

SHG condensing units air-cooled single-stage
Performance data

R404A / R507 | 50 Hz

Type	Amb. temp. °C		Cooling capacity Q_o [W] Evaporating temperature °C: 5	0	-5	-10	-15	-20	-25	-30	Power consumption P_e [kW]
SHG56e/995-4 SL	50	Q	-	-	-	-	-	20500	16200	12300	
		P	-	-	-	-	-	18.2	15.8	13.4	
	46	Q	-	-	-	33600	27900	22600	17900	13700	
		P	-	-	-	22.9	20.5	18.2	15.9	13.6	
	43	Q	-	49300	42300	35800	29800	24300	19300	14800	
		P	-	27.2	24.9	22.6	20.4	18.1	15.9	13.7	
	38	Q	62400	54300	46700	39600	33000	27000	21600	16700	
		P	28.7	26.5	24.3	22.1	20.0	17.9	15.8	13.7	
	32	Q	69200	60400	52000	44200	37000	30300	24400	19000	
		P	27.5	25.4	23.3	21.3	19.3	17.4	15.5	13.6	
	27	Q	75000	65500	56600	48100	40300	33200	26800	21000	
		P	26.4	24.4	22.4	20.5	18.7	16.9	15.1	13.4	
	15	Q	89400	78300	67800	57900	48700	40300	32700	25900	
		P	23.4	21.7	20.0	18.4	16.9	15.5	14.2	12.9	
SHG56e/1155-4 L	50	Q	-	-	-	-	-	23400	18800	14700	
		P	-	-	-	-	-	22.4	19.7	17.1	
	46	Q	-	-	-	-	31100	25700	20800	16300	
		P	-	-	-	-	24.9	22.1	19.4	16.9	
	43	Q	-	-	46400	39600	33300	27500	22300	17500	
		P	-	-	30.4	27.4	24.6	21.9	19.2	16.7	
	38	Q	-	-	51200	43800	36900	30500	24800	19600	
		P	-	-	29.5	26.7	24.0	21.4	18.9	16.5	
	32	Q	-	-	57200	48900	41200	34200	27900	22200	
		P	-	-	28.3	25.8	23.3	20.9	18.6	16.3	
	27	Q	-	71800	62200	53200	44900	37400	30500	24400	
		P	-	29.7	27.3	24.9	22.6	20.4	18.2	16.1	
	15	Q	-	85900	74600	64000	54100	45200	37100	29800	
		P	-	26.1	24.2	22.4	20.6	18.8	17.0	15.3	
SHG56e/1155-4 SL	50	Q	-	-	-	-	-	24200	19400	15100	
		P	-	-	-	-	-	22.3	19.7	17.1	
	46	Q	-	-	-	38900	32400	26600	21400	16700	
		P	-	-	-	27.5	24.7	22.0	19.4	17.0	
	43	Q	-	57000	48900	41400	34600	28500	22900	18000	
		P	-	32.5	29.8	27.1	24.4	21.8	19.2	16.8	
	38	Q	72300	62700	53800	45700	38300	31500	25500	20100	
		P	34.1	31.5	28.9	26.3	23.8	21.4	19.0	16.6	
	32	Q	80100	69600	59900	50900	42700	35300	28600	22700	
		P	32.4	30.1	27.7	25.4	23.1	20.8	18.6	16.4	
	27	Q	86700	75500	65000	55400	46500	38500	31300	24900	
		P	30.9	28.8	26.6	24.5	22.4	20.3	18.2	16.2	
	15	Q	104000	90100	77800	66300	55900	46400	38000	30500	
		P	26.6	25.0	23.4	21.8	20.2	18.6	17.0	15.3	
SHG66e/1340-4 L	50	Q	-	-	-	-	-	-	21200	16600	
		P	-	-	-	-	-	-	20.5	17.4	
	46	Q	-	-	-	-	34900	29000	23500	18400	
		P	-	-	-	-	27.0	23.7	20.5	17.5	
	43	Q	-	-	-	44100	37400	31000	25100	19700	
		P	-	-	-	30.2	26.8	23.6	20.5	17.5	
	38	Q	-	-	56900	49000	41600	34500	28000	22000	
		P	-	-	33.1	29.7	26.5	23.3	20.4	17.6	
	32	Q	-	-	63900	55100	46700	38800	31500	24900	
		P	-	-	32.1	29.0	25.9	22.9	20.1	17.5	
	27	Q	-	-	69700	60100	51000	42500	34600	27400	
		P	-	-	31.2	28.2	25.3	22.5	19.8	17.3	
	15	Q	-	96000	84000	72500	61600	51400	42000	33600	
		P	-	31.3	28.5	25.9	23.4	21.0	18.7	16.6	

Relating to 20 °C suction gas temperature without liquid subcooling

Supplementary cooling or reduced suction gas temperature

vap.bock.de

SHG condensing units air-cooled single-stage
Performance data

R404A / R507 | 50 Hz

Type	Amb. temp. °C		Cooling capacity Q_o [W] Evaporating temperature °C: 5	0	-5	-10	-15	-20	-25	-30	Power consumption P_e [kW]
SHG66e/1340-4 SL	50	Q	-	-	-	-	-	27400	22000	17100	
		P	-	-	-	-	-	23.9	20.7	17.6	
	46	Q	-	-	-	43600	36600	30200	24300	18900	
		P	-	-	-	30.3	27.0	23.8	20.7	17.7	
	43	Q	-	-	54500	46600	39200	32300	26000	20300	
		P	-	-	33.4	30.1	26.8	23.7	20.6	17.8	
	38	Q	-	69600	60400	51700	43500	35900	28900	22600	
		P	-	36.0	32.7	29.5	26.4	23.4	20.5	17.8	
	32	Q	88500	77800	67600	57900	48800	40300	32600	25600	
		P	37.9	34.8	31.7	28.7	25.8	23.0	20.3	17.7	
	27	Q	96300	84700	73600	63100	53200	44000	35600	28100	
		P	36.6	33.6	30.7	27.9	25.1	22.5	19.9	17.5	
	15	Q	116000	102000	88400	75800	64000	53100	43200	34400	
		P	32.9	30.3	27.8	25.4	23.1	20.9	18.8	16.7	

Relating to 20 °C suction gas temperature without liquid subcooling

Supplementary cooling or reduced suction gas temperature

vap.bock.de

Operating limits

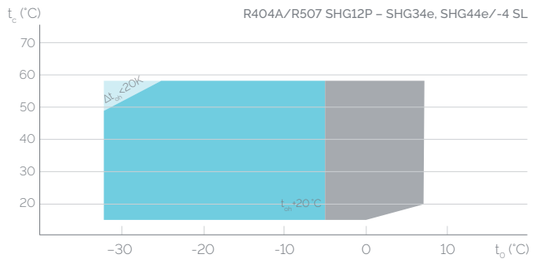

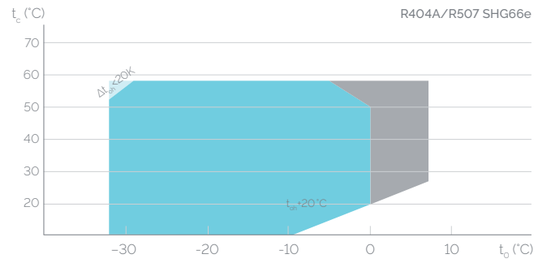

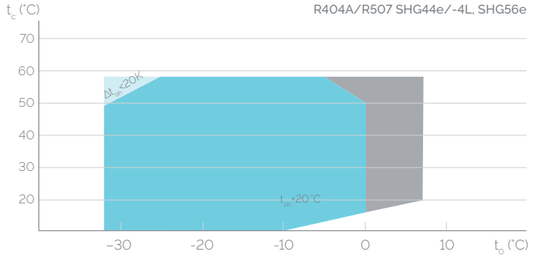

t_o Evaporating temperature (°C)
t_c Condensing temperature (°C)
Δt_{oh} Suction gas superheat (K)
t_{oh} Suction gas temperature (°C)

- Unlimited application range
- Supplementary cooling or reduced suction gas temperature (Δt_{oh}<20K)
- Motor version -S- (more powerful motor)

Max. permissible operating pressure (LP/HP) [1]: 19/28 bar

[1] LP = low pressure, HP = high pressure

SHG condensing units air-cooled single-stage
Performance data

R448A | 50 Hz

Type	Amb. temp. °C		Cooling capacity Q_o [W]							Power consumption P_e [kW]
			Evaporating temperature °C							
			5	0	-5	-10	-15	-20	-25	-30
SHG12P/60-4 SL	50	Q	-	3000	2440	1960	1550	1200	898	653
		P	-	1.97	1.78	1.60	1.43	1.26	1.10	0.963
	46	Q	3880	3210	2620	2110	1680	1300	986	725
		P	2.06	1.89	1.72	1.55	1.39	1.24	1.09	0.962
	43	Q	4060	3370	2760	2230	1770	1380	1060	778
		P	1.99	1.83	1.67	1.52	1.37	1.22	1.08	0.961
	38	Q	4360	3630	2980	2420	1930	1520	1170	867
		P	1.87	1.74	1.60	1.46	1.33	1.20	1.07	0.957
	32	Q	4730	3950	3260	2650	2130	1680	1300	972
		P	1.74	1.63	1.51	1.40	1.28	1.17	1.05	0.951
	27	Q	5040	4220	3490	2850	2290	1810	1410	1060
		P	1.63	1.54	1.45	1.35	1.24	1.14	1.04	0.942
	15	Q	5800	4880	4060	3330	2690	2140	1670	1270
		P	1.39	1.34	1.29	1.22	1.15	1.07	0.989	0.905
SHG12P/75-4 L	50	Q	-	-	-	2390	1910	1490	1140	833
		P	-	-	-	1.99	1.76	1.54	1.33	1.14
	46	Q	-	-	-	2580	2060	1620	1240	922
		P	-	-	-	1.92	1.71	1.50	1.31	1.14
	43	Q	-	-	3340	2720	2180	1720	1320	988
		P	-	-	2.09	1.88	1.67	1.48	1.30	1.13
	38	Q	-	-	3620	2960	2380	1880	1460	1100
		P	-	-	1.99	1.80	1.62	1.44	1.28	1.13
	32	Q	-	4770	3960	3240	2620	2080	1620	1230
		P	-	2.04	1.87	1.71	1.55	1.40	1.25	1.11
	27	Q	-	5100	4240	3480	2820	2240	1750	1330
		P	-	1.92	1.78	1.64	1.50	1.36	1.23	1.10
	15	Q	-	5900	4930	4070	3310	2640	2070	1580
		P	-	1.67	1.57	1.48	1.38	1.27	1.16	1.05
SHG12P/75-4 SL	50	Q	-	-	2960	2400	1910	1490	1140	833
		P	-	-	2.22	1.98	1.75	1.53	1.33	1.14
	46	Q	4640	3870	3180	2580	2060	1620	1240	922
		P	2.62	2.37	2.14	1.91	1.70	1.50	1.31	1.13
	43	Q	4860	4060	3350	2720	2180	1720	1320	988
		P	2.52	2.30	2.08	1.87	1.67	1.48	1.30	1.13
	38	Q	5230	4380	3620	2960	2380	1880	1460	1100
		P	2.37	2.17	1.98	1.79	1.61	1.44	1.27	1.12
	32	Q	5680	4770	3960	3240	2620	2080	1620	1230
		P	2.19	2.03	1.87	1.71	1.55	1.40	1.25	1.11
	27	Q	6060	5100	4240	3480	2820	2240	1750	1330
		P	2.06	1.92	1.78	1.64	1.50	1.36	1.22	1.10
	15	Q	6980	5900	4930	4070	3310	2640	2070	1580
		P	1.74	1.66	1.57	1.47	1.37	1.26	1.15	1.04
SHG12P/90-4 L	50	Q	-	-	-	2780	2230	1760	1350	1010
		P	-	-	-	2.37	2.08	1.81	1.55	1.33
	46	Q	-	-	-	3000	2420	1910	1480	1110
		P	-	-	-	2.29	2.02	1.77	1.53	1.32
	43	Q	-	-	3870	3170	2550	2030	1570	1190
		P	-	-	2.50	2.23	1.98	1.74	1.51	1.31
	38	Q	-	-	4190	3440	2790	2220	1730	1320
		P	-	-	2.38	2.14	1.91	1.69	1.48	1.30
	32	Q	-	5490	4580	3780	3070	2450	1920	1470
		P	-	2.45	2.24	2.03	1.82	1.63	1.45	1.28
	27	Q	-	5880	4910	4060	3300	2640	2070	1590
		P	-	2.31	2.12	1.94	1.76	1.58	1.42	1.26
	15	Q	-	6810	5720	4740	3870	3110	2450	1880
		P	-	2.00	1.87	1.74	1.60	1.47	1.33	1.19

Relating to 20 °C suction gas temperature without liquid subcooling

Supplementary cooling or reduced suction gas temperature

vap.bock.de

SHG condensing units air-cooled single-stage
Performance data

R448A | 50 Hz

Type	Amb. temp. °C		Cooling capacity Q_o [W]							Power consumption P_e [kW]
			Evaporating temperature °C							
			5	0	-5	-10	-15	-20	-25	-30
SHG12P/90-4 SL	50	Q	-	-	-	2780	2230	1750	1350	1000
		P	-	-	-	2.40	2.11	1.84	1.59	1.36
	46	Q	-	4440	3680	3000	2420	1910	1480	1110
		P	-	2.92	2.61	2.32	2.05	1.80	1.56	1.35
	43	Q	5550	4660	3870	3170	2550	2030	1570	1190
		P	3.13	2.82	2.53	2.26	2.01	1.77	1.55	1.35
	38	Q	5980	5040	4190	3440	2790	2220	1730	1320
		P	2.93	2.66	2.41	2.16	1.94	1.72	1.52	1.33
	32	Q	6510	5500	4590	3780	3070	2450	1920	1470
		P	2.71	2.48	2.26	2.06	1.86	1.66	1.48	1.31
	27	Q	6950	5880	4920	4060	3300	2640	2070	1590
		P	2.54	2.34	2.15	1.97	1.79	1.62	1.45	1.30
	15	Q	8020	6820	5720	4740	3870	3110	2450	1880
		P	2.15	2.03	1.90	1.77	1.64	1.50	1.37	1.23
SHG12P/110-4 L	50	Q	-	-	-	-	2540	2020	1560	1170
		P	-	-	-	-	2.45	2.11	1.80	1.52
	46	Q	-	-	-	3400	2760	2200	1710	1300
		P	-	-	-	2.72	2.37	2.06	1.77	1.51
	43	Q	-	-	-	3600	2920	2330	1820	1390
		P	-	-	-	2.64	2.32	2.02	1.75	1.50
	38	Q	-	-	4740	3920	3190	2560	2010	1540
		P	-	-	2.83	2.52	2.23	1.96	1.71	1.49
	32	Q	-	6190	5200	4310	3520	2820	2230	1710
		P	-	2.95	2.66	2.39	2.13	1.89	1.67	1.46
	27	Q	-	6640	5580	4630	3790	3050	2410	1850
		P	-	2.78	2.52	2.28	2.05	1.84	1.63	1.44
	15	Q	-	7720	6510	5420	4450	3590	2840	2190
		P	-	2.39	2.21	2.04	1.87	1.70	1.53	1.36
SHG12P/110-4 SL	50	Q	-	-	-	-	2540	2020	1560	1170
		P	-	-	-	-	2.48	2.14	1.83	1.56
	46	Q	-	-	4150	3410	2760	2200	1710	1290
		P	-	-	3.11	2.74	2.40	2.09	1.80	1.55
	43	Q	-	5230	4370	3600	2920	2330	1820	1390
		P	-	3.39	3.02	2.67	2.35	2.05	1.78	1.54
	38	Q	6690	5670	4750	3920	3190	2560	2010	1530
		P	3.57	3.20	2.86	2.55	2.26	1.99	1.74	1.52
	32	Q	7300	6200	5200	4310	3520	2830	2220	1710
		P	3.30	2.98	2.69	2.42	2.16	1.92	1.70	1.50
	27	Q	7810	6640	5590	4630	3790	3050	2400	1850
		P	3.08	2.81	2.55	2.31	2.08	1.87	1.66	1.47
	15	Q	9050	7720	6520	5420	4450	3590	2840	2190
		P	2.61	2.42	2.24	2.07	1.90	1.73	1.56	1.40
SHG22e/125-4 L	50	Q	-	-	-	-	3000	2380	1820	
		P	-	-	-	-	2.43	2.13	1.86	
	46	Q	-	-	-	3990	3240	2580	1990	1460
		P	-	-	-	2.72	2.41	2.12	1.86	1.62
	43	Q	-	-	-	4210	3430	2730	2110	1570
		P	-	-	-	2.70	2.40	2.11	1.85	1.62
	38	Q	-	-	5540	4590	3750	2990	2330	1750
		P	-	-	2.95	2.65	2.36	2.09	1.84	1.61
	32	Q	-	-	6090	5060	4140	3320	2600	1970
		P	-	-	2.85	2.57	2.30	2.05	1.81	1.59
	27	Q	-	7770	6560	5460	4470	3600	2830	2160
		P	-	3.02	2.75	2.49	2.25	2.01	1.79	1.57
	15	Q	-	9110	7720	6440	5280	4250	3360	2590
		P	-	2.70	2.48	2.27	2.07	1.88	1.69	1.51

Relating to 20 °C suction gas temperature without liquid subcooling

Supplementary cooling or reduced suction gas temperature

vap.bock.de

SHG condensing units air-cooled single-stage
Performance data

R448A | 50 Hz

Type	Amb. temp. °C		Cooling capacity Q_o [W]							Power consumption P_e [kW]
			Evaporating temperature °C							
			5	0	-5	-10	-15	-20	-25	-30
SHG22e/125-4 SL	50	Q	-	-	-	3890	3130	2470	1880	1360
		P	-	-	-	2.74	2.42	2.13	1.86	1.62
	46	Q	-	-	5080	4180	3380	2670	2050	1500
		P	-	-	3.02	2.70	2.40	2.12	1.86	1.62
	43	Q	7580	6410	5360	4410	3570	2830	2180	1610
		P	3.60	3.29	2.97	2.67	2.38	2.11	1.85	1.62
	38	Q	8200	6950	5820	4800	3890	3100	2400	1790
		P	3.48	3.19	2.90	2.61	2.34	2.08	1.83	1.61
	32	Q	8970	7620	6390	5280	4290	3430	2670	2020
		P	3.32	3.05	2.79	2.53	2.28	2.04	1.81	1.59
	27	Q	9630	8190	6870	5690	4630	3700	2900	2210
		P	3.16	2.92	2.68	2.45	2.22	1.99	1.77	1.57
	15	Q	11300	9590	8060	6680	5450	4370	3430	2640
		P	2.75	2.57	2.39	2.21	2.03	1.85	1.67	1.50
SHG22e/160-4 L	50	Q	-	-	-	-	3690	2930	2250	-
		P	-	-	-	-	2.94	2.56	2.21	-
	46	Q	-	-	-	4890	3980	3170	2440	1800
		P	-	-	-	3.31	2.92	2.55	2.21	1.91
	43	Q	-	-	-	5160	4200	3350	2600	1930
		P	-	-	-	3.28	2.89	2.54	2.21	1.91
	38	Q	-	-	6760	5620	4590	3670	2860	2150
		P	-	-	3.59	3.21	2.85	2.51	2.19	1.90
	32	Q	-	-	7440	6190	5070	4070	3190	2420
		P	-	-	3.47	3.11	2.78	2.46	2.16	1.88
	27	Q	-	9480	8020	6680	5480	4410	3470	2650
		P	-	3.69	3.35	3.02	2.70	2.41	2.12	1.86
	15	Q	-	11200	9440	7880	6470	5220	4120	3180
		P	-	3.28	3.00	2.74	2.49	2.24	2.00	1.77
SHG22e/160-4 SL	50	Q	-	-	-	-	-	3200	2470	-
		P	-	-	-	-	-	2.56	2.20	-
	46	Q	-	-	-	5210	4290	3460	2710	2010
		P	-	-	-	3.34	2.94	2.57	2.23	1.91
	43	Q	-	-	6520	5470	4510	3650	2880	2170
		P	-	-	3.74	3.31	2.92	2.57	2.24	1.94
	38	Q	9620	8270	7040	5910	4890	3980	3170	2440
		P	4.59	4.08	3.64	3.24	2.88	2.55	2.24	1.96
	32	Q	10500	9010	7670	6450	5350	4380	3510	2740
		P	4.38	3.91	3.50	3.13	2.80	2.50	2.22	1.96
	27	Q	11200	9640	8220	6920	5750	4700	3790	2980
		P	4.19	3.75	3.36	3.02	2.72	2.44	2.19	1.95
	15	Q	13100	11300	9580	8070	6700	5480	4420	3500
		P	3.69	3.32	3.00	2.72	2.48	2.25	2.05	1.85
SHG22e/190-4 L	50	Q	-	-	-	6310	5160	4140	3240	2430
		P	-	-	-	4.50	4.00	3.54	3.11	2.71
	46	Q	-	-	-	6770	5550	4470	3510	2660
		P	-	-	-	4.42	3.95	3.51	3.10	2.72
	43	Q	-	-	8580	7120	5840	4710	3720	2840
		P	-	-	4.84	4.35	3.90	3.48	3.09	2.72
	38	Q	-	-	9280	7720	6340	5130	4070	3140
		P	-	-	4.68	4.22	3.80	3.41	3.05	2.71
	32	Q	-	12100	10200	8440	6940	5630	4480	3490
		P	-	4.92	4.45	4.04	3.66	3.31	2.98	2.66
	27	Q	-	12900	10900	9050	7450	6050	4830	3770
		P	-	4.68	4.25	3.87	3.52	3.20	2.90	2.61
	15	Q	-	15000	12700	10600	8650	7020	5600	4390
		P	-	4.05	3.72	3.42	3.16	2.91	2.67	2.44

Relating to 20 °C suction gas temperature without liquid subcooling

Supplementary cooling or reduced suction gas temperature

vap.bock.de

SHG condensing units air-cooled single-stage
Performance data

R448A | 50 Hz

Type	Amb. temp. °C		Cooling capacity Q_o [W]							Power consumption P_e [kW]
			Evaporating temperature °C							
			5	0	-5	-10	-15	-20	-25	-30
SHG22e/190-4 SL	50	Q	-	-	-	6410	5240	4190	3250	2380
		P	-	-	-	4.43	3.94	3.48	3.05	2.65
	46	Q	-	9800	8240	6850	5610	4520	3540	2650
		P	-	5.39	4.85	4.36	3.90	3.47	3.07	2.69
	43	Q	12100	10300	8630	7180	5900	4760	3760	2860
		P	5.84	5.28	4.76	4.29	3.86	3.45	3.07	2.71
	38	Q	13000	11100	9300	7750	6370	5170	4110	3180
		P	5.59	5.07	4.60	4.17	3.77	3.40	3.05	2.72
	32	Q	14200	12100	10200	8440	6960	5660	4530	3540
		P	5.26	4.79	4.37	3.99	3.64	3.31	3.00	2.70
	27	Q	15100	12900	10900	9030	7440	6060	4860	3830
		P	4.98	4.55	4.17	3.83	3.51	3.21	2.93	2.65
	15	Q	17600	15000	12600	10500	8620	6990	5600	4420
		P	4.27	3.94	3.65	3.39	3.16	2.93	2.71	2.49
SHG34e/215-4 L	50	Q	-	-	-	5900	4610	3510	2590	1840
		P	-	-	-	4.37	3.78	3.25	2.80	2.42
	46	Q	-	-	-	6430	5040	3840	2830	2000
		P	-	-	-	4.29	3.73	3.23	2.80	2.43
	43	Q	-	-	8500	6840	5380	4110	3040	2140
		P	-	-	4.82	4.23	3.69	3.21	2.79	2.43
	38	Q	-	-	9350	7570	5980	4600	3420	2430
		P	-	-	4.66	4.12	3.62	3.18	2.78	2.43
	32	Q	-	12600	10500	8470	6750	5240	3930	2840
		P	-	5.00	4.47	3.98	3.53	3.13	2.76	2.44
	27	Q	-	13600	11400	9250	7400	5790	4390	3210
		P	-	4.77	4.29	3.85	3.45	3.08	2.74	2.43
	15	Q	-	16100	13500	11200	8990	7120	5500	4130
		P	-	4.14	3.80	3.49	3.19	2.91	2.64	2.38
SHG34e/215-4 SL	50	Q	-	-	-	5950	4650	3550	2620	1870
		P	-	-	-	4.31	3.75	3.25	2.82	2.45
	46	Q	-	9920	8100	6490	5080	3880	2860	2020
		P	-	5.49	4.83	4.24	3.71	3.23	2.82	2.46
	43	Q	12700	10500	8600	6910	5430	4150	3070	2170
		P	6.08	5.38	4.75	4.18	3.67	3.22	2.81	2.46
	38	Q	13800	11500	9460	7640	6030	4640	3450	2460
		P	5.82	5.18	4.60	4.08	3.61	3.18	2.80	2.47
	32	Q	15200	12800	10600	8550	6800	5280	3970	2860
		P	5.51	4.93	4.42	3.95	3.52	3.14	2.78	2.47
	27	Q	16400	13800	11500	9330	7460	5830	4420	3230
		P	5.23	4.71	4.25	3.83	3.44	3.09	2.76	2.46
	15	Q	19300	16300	13700	11200	9040	7160	5540	4160
		P	4.50	4.12	3.79	3.48	3.20	2.93	2.67	2.41
SHG34e/255-4 L	50	Q	-	-	-	-	5640	4460	3400	2460
		P	-	-	-	-	4.63	3.97	3.35	2.78
	46	Q	-	-	-	7620	6190	4880	3710	2680
		P	-	-	-	5.25	4.60	3.97	3.38	2.84
	43	Q	-	-	-	8140	6600	5210	3960	2860
		P	-	-	-	5.19	4.56	3.96	3.39	2.87
	38	Q	-	-	10900	9000	7310	5770	4390	3180
		P	-	-	5.66	5.07	4.49	3.93	3.40	2.90
	32	Q	-	14300	12100	10100	8170	6450	4930	3600
		P	-	5.96	5.43	4.90	4.37	3.86	3.37	2.91
	27	Q	-	15600	13200	11000	8890	7040	5390	3960
		P	-	5.70	5.22	4.73	4.25	3.78	3.33	2.90
	15	Q	-	18500	15700	13000	10600	8420	6510	4870
		P	-	4.96	4.61	4.24	3.87	3.50	3.14	2.79

Relating to 20 °C suction gas temperature without liquid subcooling

Supplementary cooling or reduced suction gas temperature

vap.bock.de

SHG condensing units air-cooled single-stage
Performance data

R448A | 50 Hz

Type	Amb. temp. °C		Cooling capacity Q_o [W] Evaporating temperature °C: 5	0	-5	-10	-15	-20	-25	-30	Power consumption P_e [kW]
SHG34e/255-4 SL	50	Q	-	-	-	7030	5710	4510	3440	2490	
		P	-	-		5.21	4.56	3.94	3.35	2.81	
	46	Q	-	-	9310	7720	6260	4940	3760	2720	
		P	-	-	5.78	5.15	4.53	3.94	3.38	2.86	
	43	Q	13800	11800	9940	8240	6680	5270	4010	2900	
		P	6.91	6.30	5.70	5.09	4.50	3.93	3.39	2.88	
	38	Q	15200	13100	11000	9120	7390	5830	4440	3220	
		P	6.66	6.10	5.54	4.98	4.44	3.90	3.39	2.91	
	32	Q	17000	14600	12300	10200	8260	6520	4980	3640	
		P	6.34	5.84	5.33	4.82	4.33	3.84	3.37	2.93	
	27	Q	18400	15800	13400	11100	8980	7100	5440	4000	
		P	6.04	5.59	5.13	4.67	4.21	3.76	3.33	2.91	
	15	Q	21800	18800	15900	13200	10700	8480	6560	4910	
		P	5.24	4.90	4.55	4.20	3.85	3.50	3.15	2.81	
SHG34e/315-4 L	50	Q	-	-	-	-	-	5470	4170	-	
		P	-	-	-	-	-	4.72	3.95	-	
	46	Q	-	-	-	9240	7500	5930	4530	3270	
		P	-	-	-	6.30	5.49	4.72	3.98	3.29	
	43	Q	-	-	-	9790	7950	6300	4820	3500	
		P	-	-	-	6.22	5.44	4.70	4.00	3.33	
	38	Q	-	-	13000	10800	8730	6930	5330	3910	
		P	-	-	6.82	6.06	5.34	4.65	4.00	3.38	
	32	Q	-	-	14400	12000	9710	7730	5980	4450	
		P	-	-	6.55	5.85	5.19	4.56	3.96	3.40	
	27	Q	-	18400	15600	13000	10600	8430	6550	4920	
		P	-	6.97	6.30	5.66	5.05	4.47	3.91	3.38	
	15	Q	-	21800	18500	15400	12600	10200	7930	6060	
		P	-	6.17	5.62	5.10	4.61	4.14	3.69	3.26	
SHG34e/315-4 SL	50	Q	-	-	-	9110	7320	5740	4350	3100	
		P	-	-	-	6.76	5.96	5.18	4.43	3.72	
	46	Q	-	14600	12100	9870	7930	6220	4720	3390	
		P	-	8.24	7.44	6.66	5.90	5.16	4.45	3.78	
	43	Q	18200	15400	12800	10500	8400	6600	5020	3630	
		P	8.87	8.08	7.31	6.57	5.84	5.14	4.46	3.81	
	38	Q	19900	16800	14000	11500	9210	7260	5550	4050	
		P	8.53	7.80	7.09	6.40	5.73	5.08	4.45	3.85	
	32	Q	21900	18500	15500	12700	10300	8080	6210	4600	
		P	8.10	7.44	6.80	6.17	5.57	4.98	4.41	3.86	
	27	Q	23600	20000	16700	13700	11100	8780	6780	5070	
		P	7.72	7.11	6.53	5.96	5.41	4.87	4.35	3.84	
	15	Q	27700	23500	19700	16200	13200	10500	8160	6210	
		P	6.73	6.26	5.81	5.37	4.95	4.53	4.11	3.71	
SHG34e/380-4 L	50	Q	-	-	-	-	8940	7160	5540	-	
		P	-	-	-	-	7.15	6.16	5.21	-	
	46	Q	-	-	-	11800	9630	7710	5970	4400	
		P	-	-	-	8.05	7.07	6.13	5.24	4.39	
	43	Q	-	-	-	12400	10200	8140	6320	4680	
		P	-	-	-	7.94	7.00	6.10	5.24	4.43	
	38	Q	-	-	16200	13600	11100	8900	6940	5190	
		P	-	-	8.65	7.74	6.87	6.03	5.23	4.47	
	32	Q	-	-	17900	15000	12300	9860	7720	5840	
		P	-	-	8.30	7.47	6.67	5.91	5.18	4.48	
	27	Q	-	22700	19300	16200	13300	10700	8400	6400	
		P	-	8.79	7.98	7.22	6.48	5.78	5.10	4.46	
	15	Q	-	26700	22700	19100	15700	12700	10100	7760	
		P	-	7.79	7.14	6.52	5.93	5.37	4.82	4.29	

Relating to 20 °C suction gas temperature without liquid subcooling

Supplementary cooling or reduced suction gas temperature

vap.bock.de

SHG condensing units air-cooled single-stage
Performance data

R448A | 50 Hz

Type	Amb. temp. °C		Cooling capacity Q_o [W] Evaporating temperature °C: 5	0	-5	-10	-15	-20	-25	-30	Power consumption P_e [kW]
SHG34e/380-4 SL	50	Q	-	-	-	11700	9500	7560	5830	4250	
		P	-	-	-	8.12	7.15	6.21	5.31	4.45	
	46	Q	-	18100	15200	12600	10200	8130	6280	4610	
		P	-	9.89	8.92	7.98	7.06	6.18	5.32	4.50	
	43	Q	22400	19000	16000	13200	10800	8570	6630	4900	
		P	10.6	9.69	8.76	7.86	6.99	6.14	5.32	4.53	
	38	Q	24300	20700	17400	14400	11700	9340	7260	5420	
		P	10.2	9.34	8.48	7.65	6.84	6.06	5.30	4.56	
	32	Q	26600	22700	19100	15800	12900	10400	8050	6080	
		P	9.71	8.90	8.12	7.36	6.63	5.92	5.23	4.56	
	27	Q	28600	24400	20500	17100	13900	11200	8740	6650	
		P	9.25	8.50	7.79	7.10	6.43	5.78	5.15	4.53	
	15	Q	33500	28600	24100	20000	16400	13200	10400	8000	
		P	8.06	7.47	6.91	6.37	5.85	5.34	4.83	4.34	
SHG44e/475-4 L	50	Q	-	-	-	-	11400	8980	6850	4950	
		P	-	-	-	-	8.43	7.24	6.11	5.06	
	46	Q	-	-	-	15300	12400	9860	7600	5600	
		P	-	-	-	9.62	8.42	7.28	6.20	5.19	
	43	Q	-	-	-	16200	13200	10600	8150	6070	
		P	-	-	-	9.55	8.39	7.29	6.24	5.26	
	38	Q	-	-	21200	17700	14500	11600	9050	6830	
		P	-	-	10.5	9.37	8.28	7.24	6.25	5.33	
	32	Q	-	-	23300	19500	16000	12900	10100	7710	
		P	-	-	10.1	9.07	8.06	7.10	6.19	5.33	
	27	Q	-	29500	25100	21000	17200	13900	11000	8420	
		P	-	10.7	9.74	8.76	7.82	6.93	6.08	5.28	
	15	Q	-	34400	29300	24500	20200	16300	13000	9990	
		P	-	9.47	8.62	7.83	7.08	6.36	5.67	5.01	
SHG44e/475-4 SL	50	Q	-	-	18800	15400	12300	9550	7210	5170	
		P	-	-	11.8	10.6	9.45	8.31	7.22	6.18	
	46	Q	29200	24500	20400	16600	13400	10500	8000	5850	
		P	13.9	12.7	11.6	10.5	9.40	8.33	7.29	6.30	
	43	Q	30700	25800	21500	17600	14200	11200	8580	6340	
		P	13.6	12.5	11.4	10.3	9.34	8.31	7.31	6.36	
	38	Q	33200	28000	23300	19200	15500	12300	9510	7130	
		P	13.1	12.1	11.1	10.1	9.18	8.23	7.30	6.40	
	32	Q	36100	30600	25600	21100	17100	13600	10600	8030	
		P	12.4	11.5	10.6	9.78	8.91	8.04	7.20	6.38	
	27	Q	38600	32800	27400	22600	18400	14700	11500	8740	
		P	11.8	11.0	10.2	9.41	8.62	7.84	7.06	6.31	
	15	Q	44600	37900	31800	26300	21400	17200	13500	10400	
		P	10.0	9.51	8.95	8.38	7.81	7.22	6.62	6.02	
SHG44e/565-4 L	50	Q	-	-	-	-	-	10600	8190	-	
		P	-	-	-	-	-	8.39	7.02	-	
	46	Q	-	-	-	17600	14500	11700	9060	6760	
		P	-	-	-	11.3	9.88	8.47	7.15	5.93	
	43	Q	-	-	-	18600	15400	12400	9700	7310	
		P	-	-	-	11.3	9.86	8.49	7.21	6.02	
	38	Q	-	-	-	20300	16800	13600	10800	8200	
		P	-	-	-	11.1	9.76	8.46	7.25	6.12	
	32	Q	-	-	26600	22400	18600	15100	12000	9230	
		P	-	-	12.2	10.8	9.54	8.33	7.20	6.14	
	27	Q	-	-	28600	24100	20000	16300	13000	10100	
		P	-	-	11.7	10.5	9.29	8.15	7.09	6.09	
	15	Q	-	39000	33400	28200	23500	19100	15300	11900	
		P	-	11.7	10.5	9.46	8.46	7.52	6.63	5.80	

Relating to 20 °C suction gas temperature without liquid subcooling

Supplementary cooling or reduced suction gas temperature

vap.bock.de

SHG condensing units air-cooled single-stage
Performance data

R448A | 50 Hz

Type	Amb. temp. °C		Cooling capacity Q_o [W] Evaporating temperature °C: 5	0	-5	-10	-15	-20	-25	-30
SHG44e/565-4 SL	50	Q	-	-	22600	18500	14900	11700	8870	6440
		P	-	-	13.7	12.2	10.8	9.52	8.22	6.98
	46	Q	-	29300	24400	20000	16200	12800	9810	7240
		P	-	14.8	13.5	12.1	10.8	9.54	8.30	7.12
	43	Q	36500	30800	25700	21200	17100	13600	10500	7820
		P	15.9	14.6	13.3	12.0	10.7	9.52	8.33	7.20
	38	Q	39400	33400	27900	23000	18700	14900	11600	8760
		P	15.3	14.1	12.9	11.7	10.5	9.43	8.32	7.25
	32	Q	42900	36400	30500	25200	20600	16500	12900	9810
		P	14.5	13.4	12.3	11.3	10.2	9.21	8.20	7.23
	27	Q	45800	39000	32700	27100	22100	17700	13900	10700
		P	13.7	12.8	11.8	10.8	9.91	8.97	8.04	7.14
	15	Q	52900	45000	37900	31400	25600	20600	16200	12500
		P	11.7	11.0	10.3	9.65	8.94	8.23	7.51	6.79
SHG44e/665-4 L	50	Q	-	-	-	-	15900	12500	9430	6760
		P	-	-	-	-	12.4	10.7	9.16	7.68
	46	Q	-	-	-	21400	17400	13800	10600	7690
		P	-	-	-	14.0	12.3	10.7	9.29	7.87
	43	Q	-	-	-	22700	18500	14700	11400	8370
		P	-	-	-	13.9	12.3	10.7	9.34	7.97
	38	Q	-	-	30000	24900	20300	16200	12600	9470
		P	-	-	15.2	13.6	12.1	10.7	9.35	8.06
	32	Q	-	-	33000	27500	22500	18000	14100	10800
		P	-	-	14.6	13.2	11.8	10.5	9.25	8.05
	27	Q	-	42000	35500	29600	24300	19500	15400	11800
		P	-	15.4	14.0	12.7	11.4	10.2	9.09	7.97
	15	Q	-	49000	41500	34600	28400	22900	18100	14000
		P	-	13.5	12.4	11.4	10.4	9.44	8.50	7.59
SHG44e/665-4 SL	50	Q	-	-	-	20400	16300	12800	9580	6800
		P	-	-	-	14.0	12.3	10.7	9.16	7.70
	46	Q	-	32400	27000	22200	17900	14100	10800	7800
		P	-	17.2	15.5	13.8	12.2	10.7	9.27	7.88
	43	Q	40500	34200	28600	23500	19000	15000	11600	8510
		P	18.6	16.9	15.3	13.7	12.2	10.7	9.32	7.97
	38	Q	43900	37200	31100	25700	20900	16600	12900	9660
		P	17.9	16.4	14.8	13.4	12.0	10.6	9.33	8.07
	32	Q	48000	40800	34200	28300	23100	18500	14500	11000
		P	17.0	15.6	14.3	12.9	11.7	10.4	9.24	8.08
	27	Q	51400	43800	36800	30500	24900	20000	15700	12000
		P	16.2	14.9	13.7	12.5	11.3	10.2	9.10	8.01
	15	Q	59800	51000	43000	35700	29200	23500	18500	14300
		P	14.0	13.0	12.1	11.2	10.3	9.40	8.51	7.62
SHG44e/770-4 L	50	Q	-	-	-	-	18800	14900	11400	8240
		P	-	-	-	-	14.0	12.1	10.3	8.59
	46	Q	-	-	-	25200	20500	16300	12600	9310
		P	-	-	-	15.9	14.0	12.2	10.4	8.81
	43	Q	-	-	-	26700	21800	17400	13600	10100
		P	-	-	-	15.8	13.9	12.2	10.5	8.93
	38	Q	-	-	35100	29200	23900	19200	15000	11400
		P	-	-	17.3	15.5	13.7	12.1	10.5	9.03
	32	Q	-	-	38500	32200	26400	21300	16800	12800
		P	-	-	16.6	15.0	13.4	11.8	10.4	9.03
	27	Q	-	48900	41400	34600	28400	23000	18100	14000
		P	-	17.6	16.0	14.4	13.0	11.5	10.2	8.94
	15	Q	-	57000	48300	40400	33200	26900	21300	16500
		P	-	15.4	14.1	12.9	11.7	10.6	9.55	8.49

Power consumption P_e [kW]

Relating to 20 °C suction gas temperature without liquid subcooling

Supplementary cooling or reduced suction gas temperature

vap.bock.de

SHG condensing units air-cooled single-stage
Performance data

R448A | 50 Hz

Type	Amb. temp. °C		Cooling capacity Q_o [W] Evaporating temperature °C: 5	0	-5	-10	-15	-20	-25	-30
SHG44e/770-4 SL	50	Q	-	-	-	24200	19500	15400	11700	8480
		P	-	-	-	16.5	14.6	12.7	10.9	9.22
	46	Q	-	38100	31800	26200	21200	16800	13000	9540
		P	-	20.3	18.3	16.4	14.5	12.7	11.0	9.42
	43	Q	47200	40100	33600	27700	22500	17900	13900	10400
		P	22.0	20.0	18.1	16.2	14.4	12.7	11.1	9.52
	38	Q	51100	43400	36500	30200	24600	19700	15400	11600
		P	21.2	19.4	17.6	15.9	14.2	12.6	11.0	9.61
	32	Q	55700	47500	39900	33100	27100	21700	17100	13000
		P	20.2	18.5	16.9	15.3	13.8	12.3	10.9	9.59
	27	Q	59600	50800	42800	35600	29100	23400	18400	14200
		P	19.2	17.7	16.2	14.8	13.4	12.0	10.7	9.49
	15	Q	69000	59000	49800	41400	33900	27300	21600	16700
		P	16.5	15.3	14.2	13.1	12.1	11.0	10.0	9.02
SHG56e/850-4 L	50	Q	-	-	-	-	20500	16300	12500	9130
		P	-	-	-	-	15.2	13.1	11.1	9.21
	46	Q	-	-	-	27300	22300	17900	13900	10300
		P	-	-	-	17.4	15.3	13.2	11.2	9.46
	43	Q	-	-	-	28900	23700	19100	14900	11200
		P	-	-	-	17.3	15.2	13.2	11.3	9.59
	38	Q	-	-	37700	31600	26000	21000	16500	12600
		P	-	-	19.1	17.0	15.0	13.1	11.4	9.72
	32	Q	-	-	41500	34800	28700	23200	18400	14100
		P	-	-	18.4	16.5	14.6	12.9	11.2	9.73
	27	Q	-	52400	44600	37400	30900	25100	19900	15400
		P	-	19.6	17.7	15.9	14.2	12.6	11.1	9.64
	15	Q	-	61200	52100	43800	36200	29300	23300	18100
		P	-	17.2	15.7	14.3	12.9	11.6	10.3	9.16
SHG56e/850-4 SL	50	Q	-	-	-	26400	21400	16900	13000	9430
		P	-	-	-	18.0	15.8	13.7	11.8	9.94
	46	Q	-	-	34600	28600	23300	18500	14300	10600
		P	-	-	20.0	17.8	15.8	13.8	11.9	10.1
	43	Q	-	43400	36500	30200	24700	19700	15300	11500
		P	-	21.9	19.8	17.7	15.7	13.8	12.0	10.2
	38	Q	55100	47000	39600	32900	26900	21600	16900	12900
		P	23.3	21.3	19.3	17.3	15.5	13.7	12.0	10.3
	32	Q	60100	51400	43400	36100	29600	23900	18800	14400
		P	22.3	20.4	18.5	16.8	15.1	13.4	11.8	10.3
	27	Q	64300	55100	46600	38800	31900	25700	20300	15700
		P	21.3	19.5	17.8	16.2	14.6	13.1	11.6	10.2
	15	Q	74500	63900	54100	45200	37100	30000	23700	18400
		P	18.4	17.1	15.7	14.5	13.2	12.1	10.9	9.79
SHG56e/995-4 L	50	Q	-	-	-	-	24900	19800	15200	10900
		P	-	-	-	-	19.0	16.4	13.9	11.5
	46	Q	-	-	-	32800	26900	21600	16700	12200
		P	-	-	-	21.5	18.9	16.3	13.9	11.7
	43	Q	-	-	-	34600	28400	22800	17800	13100
		P	-	-	-	21.2	18.7	16.3	13.9	11.7
	38	Q	-	-	44700	37600	31000	25000	19600	14700
		P	-	-	23.2	20.7	18.3	16.1	13.9	11.8
	32	Q	-	-	49000	41200	34000	27600	21800	16600
		P	-	-	22.2	20.0	17.8	15.7	13.7	11.8
	27	Q	-	61600	52600	44200	36600	29700	23500	18100
		P	-	23.6	21.4	19.3	17.2	15.3	13.5	11.7
	15	Q	-	71800	61300	51500	42700	34700	27600	21500
		P	-	20.9	19.0	17.3	15.7	14.2	12.7	11.3

Power consumption P_e [kW]

Relating to 20 °C suction gas temperature without liquid subcooling

Supplementary cooling or reduced suction gas temperature

vap.bock.de

SHG condensing units air-cooled single-stage
Performance data

R448A | 50 Hz

Type	Amb. temp. °C		Cooling capacity Q_o [W] Evaporating temperature °C: 5	0	-5	-10	-15	-20	-25	-30	Power consumption P_e [kW]
SHG56e/995-4 SL	50	Q	-	-	-	-	25000	19900	15200	10900	
		P	-	-	-	-	19.0	16.4	13.9	11.5	
	46	Q	-	-	-	32900	27000	21600	16700	12200	
		P	-	-	-	21.5	18.9	16.3	13.9	11.7	
	43	Q	-	-	41500	34700	28500	22900	17800	13200	
		P	-	-	23.8	21.2	18.7	16.3	14.0	11.8	
	38	Q	61300	52900	45000	37700	31100	25000	19600	14700	
		P	28.3	25.7	23.1	20.7	18.3	16.1	13.9	11.8	
	32	Q	67000	57800	49200	41300	34100	27600	21800	16600	
		P	27.0	24.6	22.2	20.0	17.8	15.7	13.7	11.8	
	27	Q	71700	61900	52800	44400	36700	29700	23600	18100	
		P	25.9	23.6	21.4	19.3	17.3	15.3	13.5	11.8	
	15	Q	83300	72000	61500	51700	42800	34700	27700	21500	
		P	22.8	20.9	19.0	17.3	15.7	14.2	12.7	11.3	
SHG56e/1155-4 L	50	Q	-	-	-	-	-	21200	16300		
		P	-	-	-	-	-	18.3	15.4		
	46	Q	-	-	-	35400	29000	23300	18100	13500	
		P	-	-	-	24.6	21.4	18.4	15.7	13.1	
	43	Q	-	-	-	37500	30900	24800	19400	14600	
		P	-	-	-	24.4	21.4	18.5	15.8	13.3	
	38	Q	-	-	-	41000	33900	27400	21600	16500	
		P	-	-	-	24.1	21.2	18.4	15.9	13.5	
	32	Q	-	-	53800	45300	37500	30400	24100	18600	
		P	-	-	26.3	23.5	20.7	18.2	15.8	13.5	
	27	Q	-	-	57900	48800	40400	32900	26200	20300	
		P	-	-	25.5	22.8	20.2	17.8	15.5	13.4	
	15	Q	-	79200	67900	57300	47500	38700	30900	24100	
		P	-	25.3	22.9	20.6	18.4	16.4	14.6	12.8	
SHG56e/1155-4 SL	50	Q	-	-	-	-	27700	21900	16800	12300	
		P	-	-	-	-	21.4	18.4	15.6	13.0	
	46	Q	-	-	-	37000	30200	24100	18700	13900	
		P	-	-	-	24.4	21.4	18.6	15.9	13.3	
	43	Q	-	-	47100	39200	32100	25700	20000	15000	
		P	-	-	27.3	24.3	21.4	18.6	16.0	13.5	
	38	Q	70700	60600	51400	42900	35200	28300	22300	16900	
		P	32.9	29.7	26.7	23.8	21.1	18.5	16.0	13.7	
	32	Q	77400	66500	56500	47200	38900	31400	24800	19100	
		P	31.5	28.6	25.8	23.1	20.6	18.2	15.8	13.7	
	27	Q	83000	71500	60700	50900	41900	33900	26900	20800	
		P	30.2	27.5	24.8	22.4	20.0	17.7	15.6	13.5	
	15	Q	96600	83300	70900	59500	49100	39800	31600	24500	
		P	26.5	24.2	22.1	20.0	18.1	16.3	14.6	12.9	
SHG66e/1340-4 L	50	Q	-	-	-	-	-	24200	18700	13500	
		P	-	-	-	-	-	20.4	17.1	14.0	
	46	Q	-	-	-	-	32700	26400	20500	15000	
		P	-	-	-	-	23.9	20.5	17.3	14.3	
	43	Q	-	-	-	41900	34700	28000	21800	16200	
		P	-	-	-	27.3	23.8	20.5	17.4	14.5	
	38	Q	-	-	54200	45800	37900	30700	24100	18100	
		P	-	-	30.5	26.9	23.5	20.4	17.5	14.8	
	32	Q	-	-	59600	50400	41900	34000	26900	20500	
		P	-	-	29.6	26.2	23.1	20.1	17.4	14.9	
	27	Q	-	74600	64200	54300	45200	36800	29200	22500	
		P	-	32.2	28.8	25.6	22.6	19.8	17.2	14.9	
	15	Q	-	87400	75300	63800	53200	43500	34800	27200	
		P	-	29.5	26.4	23.6	21.0	18.6	16.4	14.4	

Relating to 20 °C suction gas temperature without liquid subcooling

Supplementary cooling and reduced suction gas temperature

Supplementary cooling or reduced suction gas temperature

vap.bock.de

SHG condensing units air-cooled single-stage
Performance data

R448A | 50 Hz

Type	Amb. temp. °C		Cooling capacity Q_o [W] Evaporating temperature °C: 5	0	-5	-10	-15	-20	-25	-30	Power consumption P_e [kW]
SHG66e/1340-4 SL	50	Q	-	-	-	-	-	25100	19300	13900	
		P	-	-	-	-	-	20.6	17.4	14.3	
	46	Q	-	-	-	41700	34200	27400	21100	15500	
		P	-	-	-	27.4	24.0	20.7	17.6	14.7	
	43	Q	-	-	52700	44100	36200	29100	22600	16700	
		P	-	-	30.8	27.2	23.8	20.7	17.7	14.9	
	38	Q	-	67300	57400	48100	39600	31900	24900	18700	
		P	-	33.7	30.1	26.7	23.5	20.5	17.7	15.1	
	32	Q	85500	73900	63000	53000	43700	35300	27800	21100	
		P	36.1	32.5	29.1	26.0	23.0	20.2	17.6	15.1	
	27	Q	91700	79400	67800	57000	47100	38200	30200	23100	
		P	34.8	31.4	28.2	25.3	22.5	19.8	17.4	15.1	
	15	Q	107000	92700	79300	66800	55400	45000	35900	27900	
		P	31.5	28.5	25.7	23.1	20.7	18.5	16.5	14.5	

Relating to 20 °C suction gas temperature without liquid subcooling

Supplementary cooling and reduced suction gas temperature

Supplementary cooling or reduced suction gas temperature

vap.bock.de

Operating limits

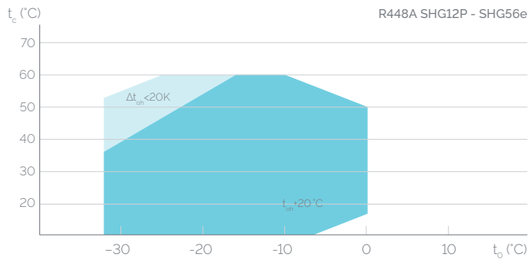

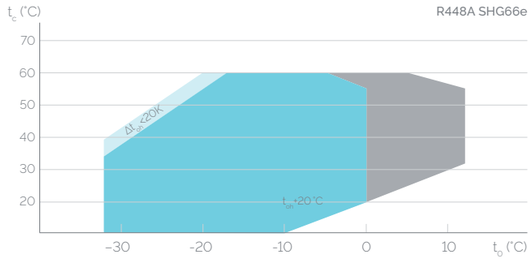

t_o Evaporating temperature (°C)
t_c Condensing temperature (°C)
Δt_{oh} Suction gas superheat (K)
t_{oh} Suction gas temperature (°C)

- Unlimited application range
- Supplementary cooling or reduced suction gas temperature (Δt_{oh}<20K)
- Motor version -S- (more powerful motor)

Max. permissible operating pressure (LP/HP) [1]: 19/28 bar
[1] LP = low pressure, HP = high pressure

SHG condensing units air-cooled single-stage
Performance data

R449A | 50 Hz

Type	Amb. temp. °C		Cooling capacity Q_o [W]						Power consumption P_e [kW]	
			Evaporating temperature °C							
			5	0	-5	-10	-15	-20	-25	-30
SHG12P/60-4 SL	50	Q	-	2980	2430	1950	1540	1190	896	652
		P	-	1.96	1.77	1.59	1.42	1.26	1.10	0.963
	46	Q	3850	3190	2610	2100	1670	1300	983	724
		P	2.05	1.88	1.71	1.55	1.39	1.24	1.09	0.961
	43	Q	4030	3340	2740	2220	1760	1380	1050	777
		P	1.98	1.82	1.67	1.51	1.36	1.22	1.08	0.960
	38	Q	4330	3610	2970	2410	1920	1510	1160	865
		P	1.86	1.73	1.59	1.46	1.32	1.19	1.07	0.957
	32	Q	4700	3930	3240	2640	2120	1670	1290	970
		P	1.73	1.62	1.51	1.39	1.28	1.16	1.05	0.950
	27	Q	5010	4200	3480	2840	2290	1810	1400	1060
		P	1.63	1.54	1.44	1.34	1.24	1.14	1.04	0.941
	15	Q	5780	4870	4050	3320	2690	2140	1670	1270
		P	1.39	1.34	1.28	1.22	1.15	1.07	0.988	0.904
SHG12P/75-4 L	50	Q	-	-	-	2380	1900	1480	1130	832
		P	-	-	-	1.98	1.75	1.53	1.33	1.14
	46	Q	-	-	-	2570	2050	1610	1240	921
		P	-	-	-	1.92	1.70	1.50	1.31	1.14
	43	Q	-	-	3320	2710	2170	1710	1320	987
		P	-	-	2.08	1.87	1.67	1.48	1.30	1.13
	38	Q	-	-	3600	2940	2370	1880	1450	1100
		P	-	-	1.98	1.79	1.61	1.44	1.28	1.13
	32	Q	-	4740	3940	3230	2610	2070	1610	1230
		P	-	2.03	1.87	1.71	1.55	1.40	1.25	1.11
	27	Q	-	5070	4220	3470	2810	2240	1750	1330
		P	-	1.92	1.78	1.64	1.50	1.36	1.23	1.10
	15	Q	-	5880	4920	4060	3300	2640	2070	1580
		P	-	1.66	1.57	1.47	1.37	1.27	1.16	1.05
SHG12P/75-4 SL	50	Q	-	-	2940	2380	1900	1480	1130	832
		P	-	-	2.21	1.97	1.74	1.52	1.32	1.14
	46	Q	4610	3840	3160	2570	2050	1610	1240	920
		P	2.60	2.36	2.13	1.91	1.69	1.49	1.31	1.13
	43	Q	4830	4030	3330	2710	2170	1710	1320	986
		P	2.51	2.28	2.07	1.86	1.66	1.47	1.29	1.13
	38	Q	5200	4350	3600	2940	2370	1870	1450	1100
		P	2.36	2.16	1.97	1.79	1.61	1.44	1.27	1.12
	32	Q	5650	4740	3940	3230	2610	2070	1610	1230
		P	2.18	2.02	1.86	1.70	1.54	1.39	1.25	1.11
	27	Q	6020	5070	4220	3470	2810	2240	1750	1330
		P	2.05	1.91	1.77	1.63	1.49	1.36	1.22	1.09
	15	Q	6950	5880	4920	4060	3300	2640	2070	1580
		P	1.74	1.65	1.56	1.47	1.37	1.26	1.15	1.04
SHG12P/90-4 L	50	Q	-	-	-	2760	2220	1750	1350	999
		P	-	-	-	2.36	2.07	1.80	1.55	1.32
	46	Q	-	-	-	2980	2400	1900	1470	1110
		P	-	-	-	2.28	2.01	1.76	1.53	1.31
	43	Q	-	-	3840	3150	2540	2020	1570	1190
		P	-	-	2.49	2.22	1.97	1.73	1.51	1.31
	38	Q	-	-	4170	3430	2770	2210	1730	1310
		P	-	-	2.37	2.13	1.90	1.68	1.48	1.29
	32	Q	-	5460	4560	3760	3050	2440	1910	1460
		P	-	2.44	2.23	2.02	1.82	1.63	1.45	1.28
	27	Q	-	5850	4890	4040	3290	2630	2070	1590
		P	-	2.30	2.11	1.93	1.75	1.58	1.42	1.26
	15	Q	-	6790	5700	4730	3860	3100	2440	1880
		P	-	1.99	1.86	1.73	1.60	1.46	1.33	1.19

Relating to 20 °C suction gas temperature without liquid subcooling

Supplementary cooling or reduced suction gas temperature

vap.bock.de

SHG condensing units air-cooled single-stage
Performance data

R449A | 50 Hz

Type	Amb. temp. °C		Cooling capacity Q_o [W]						Power consumption P_e [kW]	
			Evaporating temperature °C							
			5	0	-5	-10	-15	-20	-25	-30
SHG12P/90-4 SL	50	Q	-	-	-	2770	2220	1750	1340	998
		P	-	-	-	2.39	2.10	1.83	1.58	1.36
	46	Q	-	4410	3650	2990	2400	1900	1470	1110
		P	-	2.90	2.59	2.31	2.04	1.79	1.56	1.35
	43	Q	5510	4630	3850	3150	2540	2020	1570	1190
		P	3.10	2.80	2.52	2.25	2.00	1.76	1.54	1.34
	38	Q	5950	5010	4170	3430	2770	2210	1720	1310
		P	2.91	2.65	2.39	2.16	1.93	1.72	1.52	1.33
	32	Q	6470	5470	4560	3760	3050	2440	1910	1460
		P	2.70	2.47	2.25	2.05	1.85	1.66	1.48	1.31
	27	Q	6910	5850	4890	4040	3290	2630	2070	1590
		P	2.53	2.33	2.14	1.96	1.79	1.61	1.45	1.29
	15	Q	7990	6790	5700	4730	3860	3100	2440	1880
		P	2.14	2.02	1.89	1.76	1.63	1.50	1.36	1.23
SHG12P/110-4 L	50	Q	-	-	-	-	2530	2010	1560	1170
		P	-	-	-	-	2.44	2.10	1.80	1.52
	46	Q	-	-	-	3390	2750	2190	1710	1290
		P	-	-	-	2.70	2.37	2.05	1.77	1.51
	43	Q	-	-	-	3580	2910	2320	1820	1380
		P	-	-	-	2.63	2.31	2.02	1.75	1.50
	38	Q	-	-	4720	3900	3180	2550	2000	1530
		P	-	-	2.82	2.51	2.23	1.96	1.71	1.48
	32	Q	-	6160	5170	4290	3500	2820	2220	1710
		P	-	2.93	2.65	2.38	2.13	1.89	1.67	1.46
	27	Q	-	6610	5560	4610	3780	3040	2400	1850
		P	-	2.76	2.51	2.27	2.05	1.83	1.63	1.44
	15	Q	-	7690	6490	5410	4440	3580	2830	2190
		P	-	2.38	2.21	2.03	1.86	1.69	1.52	1.36
SHG12P/110-4 SL	50	Q	-	-	-	-	2530	2010	1560	1170
		P	-	-	-	-	2.47	2.13	1.83	1.56
	46	Q	-	-	4120	3390	2750	2190	1710	1290
		P	-	-	3.10	2.73	2.39	2.08	1.80	1.54
	43	Q	-	5200	4350	3580	2910	2320	1820	1380
		P	-	3.37	3.00	2.66	2.34	2.05	1.78	1.53
	38	Q	6650	5640	4720	3900	3180	2550	2000	1530
		P	3.54	3.18	2.85	2.54	2.25	1.99	1.74	1.52
	32	Q	7260	6170	5180	4290	3500	2820	2220	1710
		P	3.27	2.96	2.68	2.41	2.16	1.92	1.70	1.49
	27	Q	7770	6610	5560	4620	3780	3040	2400	1850
		P	3.06	2.79	2.54	2.30	2.08	1.86	1.66	1.47
	15	Q	9010	7690	6490	5410	4440	3580	2830	2190
		P	2.59	2.41	2.23	2.06	1.89	1.72	1.56	1.39
SHG22e/125-4 L	50	Q	-	-	-	-	2990	2370	1810	-
		P	-	-	-	-	2.42	2.12	1.85	-
	46	Q	-	-	-	3970	3230	2560	1980	1450
		P	-	-	-	2.71	2.40	2.12	1.85	1.61
	43	Q	-	-	-	4190	3410	2720	2100	1560
		P	-	-	-	2.68	2.39	2.11	1.85	1.61
	38	Q	-	-	5510	4570	3730	2980	2320	1740
		P	-	-	2.93	2.63	2.35	2.08	1.83	1.61
	32	Q	-	-	6060	5040	4120	3310	2590	1970
		P	-	-	2.83	2.56	2.29	2.04	1.81	1.59
	27	Q	-	7730	6530	5440	4450	3580	2820	2150
		P	-	3.00	2.74	2.48	2.24	2.00	1.78	1.57
	15	Q	-	9080	7690	6410	5260	4240	3350	2580
		P	-	2.68	2.47	2.26	2.07	1.87	1.68	1.50

Relating to 20 °C suction gas temperature without liquid subcooling

Supplementary cooling or reduced suction gas temperature

vap.bock.de

SHG condensing units air-cooled single-stage
Performance data

R449A | 50 Hz

Type	Amb. temp. °C		Cooling capacity Q_o [W] Evaporating temperature °C: 5	0	-5	-10	-15	-20	-25	-30	Power consumption P_e [kW]
SHG22e/125-4 SL	50	Q	-	-	-	3860	3110	2460	1870	1350	
		P	-	-	-	2.72	2.41	2.12	1.85	1.61	
	46	Q	-	6050	5050	4150	3360	2660	2040	1490	
		P	-	3.32	3.00	2.69	2.39	2.11	1.85	1.61	
	43	Q	7530	6370	5320	4380	3550	2810	2170	1600	
		P	3.58	3.27	2.96	2.66	2.37	2.10	1.84	1.61	
	38	Q	8150	6910	5780	4770	3870	3080	2390	1790	
		P	3.46	3.17	2.88	2.60	2.33	2.07	1.83	1.60	
	32	Q	8920	7580	6350	5250	4270	3410	2660	2010	
		P	3.29	3.03	2.77	2.52	2.27	2.03	1.80	1.59	
	27	Q	9580	8150	6840	5660	4610	3690	2890	2200	
		P	3.14	2.91	2.67	2.44	2.21	1.99	1.77	1.56	
	15	Q	11200	9550	8030	6660	5430	4350	3420	2630	
		P	2.73	2.55	2.38	2.20	2.02	1.85	1.67	1.49	
SHG22e/160-4 L	50	Q	-	-	-	-	3660	2910	2230	-	
		P	-	-	-	-	2.92	2.55	2.21	-	
	46	Q	-	-	-	4860	3950	3150	2430	1790	
		P	-	-	-	3.29	2.90	2.54	2.20	1.91	
	43	Q	-	-	-	5130	4180	3330	2580	1920	
		P	-	-	-	3.26	2.88	2.53	2.20	1.91	
	38	Q	-	-	6720	5590	4570	3650	2850	2140	
		P	-	-	3.57	3.19	2.84	2.50	2.18	1.90	
	32	Q	-	-	7400	6160	5040	4050	3180	2410	
		P	-	-	3.45	3.10	2.76	2.45	2.15	1.88	
	27	Q	-	9430	7980	6650	5450	4390	3450	2640	
		P	-	3.67	3.33	3.00	2.69	2.40	2.12	1.85	
	15	Q	-	11100	9400	7850	6450	5200	4110	3170	
		P	-	3.26	2.99	2.73	2.48	2.23	2.00	1.77	
SHG22e/160-4 SL	50	Q	-	-	-	-	-	3180	2460	-	
		P	-	-	-	-	-	2.55	2.19	-	
	46	Q	-	-	-	5180	4260	3440	2690	2000	
		P	-	-	-	3.33	2.93	2.56	2.22	1.91	
	43	Q	-	-	6480	5430	4490	3630	2870	2160	
		P	-	-	3.72	3.29	2.91	2.56	2.23	1.93	
	38	Q	9560	8220	6990	5870	4870	3960	3150	2430	
		P	4.56	4.06	3.62	3.22	2.87	2.54	2.24	1.95	
	32	Q	10400	8960	7630	6420	5330	4360	3490	2730	
		P	4.35	3.89	3.48	3.12	2.79	2.49	2.22	1.96	
	27	Q	11200	9590	8180	6880	5720	4680	3770	2970	
		P	4.16	3.73	3.35	3.01	2.71	2.44	2.18	1.94	
	15	Q	13000	11200	9540	8040	6680	5470	4410	3490	
		P	3.67	3.30	2.99	2.71	2.47	2.25	2.04	1.84	
SHG22e/190-4 L	50	Q	-	-	-	6270	5130	4120	3220	2410	
		P	-	-	-	4.48	3.98	3.53	3.10	2.70	
	46	Q	-	-	-	6730	5510	4440	3500	2650	
		P	-	-	-	4.40	3.93	3.50	3.09	2.71	
	43	Q	-	-	8520	7080	5810	4690	3700	2830	
		P	-	-	4.82	4.33	3.88	3.47	3.08	2.71	
	38	Q	-	-	9230	7670	6300	5100	4050	3120	
		P	-	-	4.65	4.20	3.78	3.40	3.04	2.70	
	32	Q	-	12000	10100	8400	6910	5600	4470	3470	
		P	-	4.89	4.43	4.02	3.64	3.30	2.97	2.66	
	27	Q	-	12900	10900	9010	7420	6020	4810	3760	
		P	-	4.65	4.23	3.85	3.51	3.19	2.89	2.60	
	15	Q	-	15000	12600	10500	8630	7000	5590	4380	
		P	-	4.03	3.70	3.41	3.15	2.90	2.67	2.44	

Relating to 20 °C suction gas temperature without liquid subcooling

Supplementary cooling or reduced suction gas temperature

vap.bock.de

SHG condensing units air-cooled single-stage
Performance data

R449A | 50 Hz

Type	Amb. temp. °C		Cooling capacity Q_o [W] Evaporating temperature °C: 5	0	-5	-10	-15	-20	-25	-30	Power consumption P_e [kW]
SHG22e/190-4 SL	50	Q	-	-	-	6370	5200	4170	3230	2370	
		P	-	-	-	4.41	3.92	3.47	3.04	2.64	
	46	Q	-	9730	8180	6800	5580	4490	3520	2640	
		P	-	5.36	4.83	4.34	3.88	3.46	3.06	2.68	
	43	Q	12000	10200	8580	7140	5860	4740	3740	2840	
		P	5.80	5.25	4.74	4.27	3.84	3.44	3.06	2.70	
	38	Q	13000	11000	9240	7700	6340	5140	4090	3160	
		P	5.55	5.04	4.57	4.15	3.76	3.39	3.04	2.71	
	32	Q	14100	12000	10100	8400	6920	5630	4510	3530	
		P	5.23	4.77	4.35	3.98	3.63	3.30	2.99	2.69	
	27	Q	15100	12800	10800	8990	7410	6030	4840	3820	
		P	4.95	4.53	4.15	3.81	3.50	3.20	2.92	2.65	
	15	Q	17500	14900	12600	10500	8590	6970	5590	4410	
		P	4.25	3.92	3.64	3.38	3.15	2.92	2.70	2.49	
SHG34e/215-4 L	50	Q	-	-	-	5860	4580	3490	2580	1830	
		P	-	-	-	4.34	3.76	3.24	2.79	2.41	
	46	Q	-	-	-	6390	5010	3820	2820	1990	
		P	-	-	-	4.27	3.71	3.22	2.79	2.42	
	43	Q	-	-	8450	6800	5350	4090	3020	2130	
		P	-	-	4.79	4.21	3.68	3.20	2.78	2.42	
	38	Q	-	-	9300	7520	5950	4580	3410	2420	
		P	-	-	4.64	4.10	3.61	3.17	2.77	2.43	
	32	Q	-	12500	10400	8430	6720	5210	3920	2830	
		P	-	4.98	4.44	3.96	3.52	3.12	2.76	2.43	
	27	Q	-	13600	11300	9200	7370	5760	4380	3200	
		P	-	4.74	4.27	3.84	3.44	3.07	2.73	2.42	
	15	Q	-	16100	13500	11100	8960	7100	5490	4120	
		P	-	4.12	3.79	3.48	3.18	2.91	2.64	2.38	
SHG34e/215-4 SL	50	Q	-	-	-	5920	4620	3520	2610	1860	
		P	-	-	-	4.29	3.74	3.24	2.81	2.45	
	46	Q	-	9850	8050	6450	5050	3860	2850	2010	
		P	-	5.46	4.81	4.22	3.69	3.22	2.81	2.45	
	43	Q	12600	10500	8550	6870	5400	4130	3050	2160	
		P	6.04	5.35	4.72	4.16	3.66	3.20	2.80	2.45	
	38	Q	13700	11500	9410	7600	6000	4620	3440	2450	
		P	5.79	5.15	4.58	4.06	3.60	3.17	2.79	2.46	
	32	Q	15100	12700	10500	8510	6770	5250	3950	2850	
		P	5.47	4.91	4.40	3.93	3.51	3.13	2.78	2.46	
	27	Q	16300	13800	11400	9290	7430	5810	4410	3220	
		P	5.20	4.69	4.23	3.81	3.43	3.08	2.75	2.46	
	15	Q	19200	16300	13600	11200	9020	7140	5520	4150	
		P	4.47	4.10	3.77	3.47	3.19	2.92	2.66	2.41	
SHG34e/255-4 L	50	Q	-	-	-	6900	5610	4430	3380	2450	
		P	-	-	-	5.29	4.61	3.96	3.34	2.77	
	46	Q	-	-	-	7570	6150	4850	3690	2670	
		P	-	-	-	5.22	4.58	3.96	3.37	2.83	
	43	Q	-	-	-	8090	6570	5180	3940	2850	
		P	-	-	-	5.16	4.55	3.95	3.38	2.86	
	38	Q	-	-	10800	8950	7270	5740	4370	3170	
		P	-	-	5.63	5.05	4.47	3.92	3.39	2.89	
	32	Q	-	14300	12100	10000	8130	6430	4910	3590	
		P	-	5.93	5.41	4.88	4.36	3.85	3.36	2.90	
	27	Q	-	15500	13100	10900	8850	7010	5370	3950	
		P	-	5.66	5.19	4.71	4.24	3.77	3.32	2.89	
	15	Q	-	18400	15600	13000	10600	8390	6490	4860	
		P	-	4.93	4.58	4.22	3.86	3.49	3.13	2.78	

Relating to 20 °C suction gas temperature without liquid subcooling

Supplementary cooling or reduced suction gas temperature

vap.bock.de

SHG condensing units air-cooled single-stage
Performance data

R449A | 50 Hz

Type	Amb. temp. °C		Cooling capacity Q_o [W] Evaporating temperature °C: 5	0	-5	-10	-15	-20	-25	-30	Power consumption P_e [kW]
SHG34e/255-4 SL	50	Q	-	-	-	6990	5670	4490	3420	2480	
		P	-	-	-	5.19	4.54	3.93	3.34	2.80	
	46	Q	-	-	9260	7670	6220	4910	3740	2700	
		P	-	-	5.75	5.12	4.52	3.93	3.37	2.85	
	43	Q	13700	11800	9880	8190	6640	5240	3990	2880	
		P	6.86	6.27	5.67	5.07	4.49	3.92	3.38	2.88	
	38	Q	15100	13000	11000	9070	7350	5800	4420	3200	
		P	6.62	6.07	5.51	4.96	4.42	3.89	3.38	2.91	
	32	Q	16900	14500	12200	10200	8220	6490	4960	3620	
		P	6.30	5.80	5.30	4.80	4.31	3.83	3.36	2.92	
	27	Q	18300	15700	13300	11000	8940	7070	5420	3990	
		P	6.00	5.56	5.10	4.65	4.20	3.75	3.32	2.91	
	15	Q	21700	18700	15800	13100	10700	8460	6540	4900	
		P	5.21	4.87	4.53	4.19	3.84	3.49	3.14	2.80	
SHG34e/315-4 L	50	Q	-	-	-	-	-	5440	4150	-	
		P	-	-	-	-	-	4.70	3.94	-	
	46	Q	-	-	-	9180	7460	5900	4500	3260	
		P	-	-	-	6.26	5.46	4.70	3.97	3.29	
	43	Q	-	-	-	9730	7910	6260	4790	3480	
		P	-	-	-	6.18	5.42	4.68	3.98	3.32	
	38	Q	-	-	12900	10700	8690	6900	5300	3900	
		P	-	-	6.78	6.03	5.32	4.63	3.98	3.37	
	32	Q	-	-	14300	11900	9670	7700	5960	4430	
		P	-	-	6.51	5.83	5.17	4.55	3.95	3.39	
	27	Q	-	18300	15500	12900	10600	8390	6530	4900	
		P	-	6.93	6.26	5.63	5.03	4.45	3.90	3.38	
	15	Q	-	21700	18400	15400	12600	10100	7910	6050	
		P	-	6.14	5.59	5.08	4.59	4.13	3.68	3.26	
SHG34e/315-4 SL	50	Q	-	-	-	9060	7280	5710	4320	3090	
		P	-	-	-	6.73	5.93	5.16	4.42	3.71	
	46	Q	-	14500	12000	9810	7880	6190	4700	3370	
		P	-	8.19	7.40	6.62	5.87	5.14	4.44	3.77	
	43	Q	18100	15300	12700	10400	8350	6560	4990	3610	
		P	8.81	8.03	7.27	6.54	5.82	5.12	4.45	3.80	
	38	Q	19800	16700	13900	11400	9160	7220	5520	4030	
		P	8.48	7.75	7.05	6.37	5.71	5.07	4.44	3.84	
	32	Q	21700	18400	15400	12600	10200	8040	6190	4580	
		P	8.05	7.40	6.76	6.15	5.55	4.97	4.40	3.85	
	27	Q	23400	19900	16600	13700	11100	8740	6760	5060	
		P	7.67	7.07	6.50	5.94	5.39	4.86	4.34	3.83	
	15	Q	27500	23400	19600	16200	13100	10500	8140	6200	
		P	6.70	6.23	5.78	5.35	4.93	4.51	4.10	3.70	
SHG34e/380-4 L	50	Q	-	-	-	-	8890	7120	5510	-	
		P	-	-	-	-	7.12	6.13	5.20	-	
	46	Q	-	-	-	11700	9570	7670	5940	4380	
		P	-	-	-	8.01	7.04	6.11	5.22	4.38	
	43	Q	-	-	-	12400	10100	8100	6290	4660	
		P	-	-	-	7.90	6.97	6.08	5.23	4.42	
	38	Q	-	-	16100	13500	11100	8860	6910	5160	
		P	-	-	8.61	7.70	6.84	6.01	5.21	4.46	
	32	Q	-	-	17800	14900	12200	9810	7690	5810	
		P	-	-	8.26	7.43	6.64	5.89	5.16	4.47	
	27	Q	-	22600	19200	16100	13200	10700	8370	6380	
		P	-	8.74	7.94	7.18	6.46	5.76	5.09	4.45	
	15	Q	-	26600	22700	19000	15700	12700	10000	7740	
		P	-	7.75	7.11	6.50	5.91	5.35	4.81	4.28	

Relating to 20 °C suction gas temperature without liquid subcooling

Supplementary cooling or reduced suction gas temperature

vap.bock.de

SHG condensing units air-cooled single-stage
Performance data

R449A | 50 Hz

Type	Amb. temp. °C		Cooling capacity Q_o [W] Evaporating temperature °C: 5	0	-5	-10	-15	-20	-25	-30	Power consumption P_e [kW]
SHG34e/380-4 SL	50	Q	-	-	-	11600	9440	7520	5790	4230	
		P	-	-	-	8.08	7.12	6.19	5.29	4.43	
	46	Q	-	18000	15100	12500	10200	8080	6240	4590	
		P	-	9.83	8.87	7.94	7.03	6.16	5.31	4.49	
	43	Q	22300	18900	15900	13200	10700	8520	6600	4880	
		P	10.5	9.63	8.72	7.82	6.96	6.12	5.30	4.52	
	38	Q	24200	20600	17300	14300	11700	9300	7230	5390	
		P	10.1	9.29	8.44	7.62	6.81	6.04	5.28	4.55	
	32	Q	26500	22600	19000	15800	12900	10300	8020	6060	
		P	9.65	8.85	8.08	7.33	6.61	5.90	5.22	4.55	
	27	Q	28500	24300	20400	17000	13900	11100	8700	6630	
		P	9.19	8.46	7.75	7.07	6.41	5.76	5.13	4.52	
	15	Q	33300	28400	24000	19900	16300	13100	10400	7990	
		P	8.01	7.43	6.88	6.35	5.83	5.32	4.82	4.33	
SHG44e/475-4 L	50	Q	-	-	-	-	11400	8930	6810	4930	
		P	-	-	-	-	8.39	7.21	6.09	5.05	
	46	Q	-	-	-	15200	12400	9810	7560	5570	
		P	-	-	-	9.58	8.39	7.26	6.18	5.18	
	43	Q	-	-	-	16100	13100	10500	8110	6040	
		P	-	-	-	9.50	8.35	7.26	6.22	5.25	
	38	Q	-	-	21100	17600	14400	11600	9010	6810	
		P	-	-	10.4	9.32	8.24	7.21	6.23	5.31	
	32	Q	-	-	23200	19400	15900	12800	10100	7690	
		P	-	-	10.0	9.03	8.03	7.08	6.17	5.31	
	27	Q	-	29400	24900	20900	17200	13900	11000	8390	
		P	-	10.7	9.69	8.72	7.79	6.91	6.06	5.26	
	15	Q	-	34300	29200	24400	20100	16300	12900	9970	
		P	-	9.41	8.58	7.80	7.05	6.34	5.66	5.00	
SHG44e/475-4 SL	50	Q	-	-	18700	15300	12200	9490	7170	5140	
		P	-	-	11.7	10.5	9.41	8.28	7.20	6.16	
	46	Q	29000	24400	20200	16500	13300	10500	7960	5820	
		P	13.8	12.7	11.5	10.4	9.37	8.30	7.27	6.28	
	43	Q	30500	25700	21300	17500	14100	11200	8530	6310	
		P	13.5	12.4	11.4	10.3	9.31	8.28	7.29	6.34	
	38	Q	32900	27800	23200	19100	15400	12300	9470	7100	
		P	13.0	12.0	11.0	10.1	9.15	8.20	7.28	6.39	
	32	Q	35900	30400	25400	21000	17000	13600	10600	8000	
		P	12.3	11.4	10.6	9.74	8.88	8.02	7.18	6.37	
	27	Q	38400	32600	27300	22500	18300	14600	11500	8710	
		P	11.7	10.9	10.1	9.38	8.59	7.82	7.05	6.29	
	15	Q	44400	37800	31700	26200	21400	17100	13400	10300	
		P	10.0	9.47	8.92	8.36	7.78	7.20	6.60	6.00	
SHG44e/565-4 L	50	Q	-	-	-	-	-	10600	8140	-	
		P	-	-	-	-	-	8.36	7.00	-	
	46	Q	-	-	-	17500	14400	11600	9010	6730	
		P	-	-	-	11.3	9.84	8.44	7.12	5.91	
	43	Q	-	-	-	18500	15300	12300	9650	7280	
		P	-	-	-	11.2	9.82	8.46	7.18	6.00	
	38	Q	-	-	-	20200	16700	13600	10700	8170	
		P	-	-	-	11.0	9.72	8.43	7.22	6.10	
	32	Q	-	-	26400	22300	18500	15000	12000	9200	
		P	-	-	12.1	10.7	9.50	8.30	7.17	6.12	
	27	Q	-	-	28400	24000	19900	16200	13000	10100	
		P	-	-	11.7	10.4	9.25	8.12	7.06	6.07	
	15	Q	-	38800	33300	28100	23400	19100	15200	11900	
		P	-	11.6	10.4	9.42	8.42	7.49	6.61	5.78	

Relating to 20 °C suction gas temperature without liquid subcooling

Supplementary cooling or reduced suction gas temperature

vap.bock.de

SHG condensing units air-cooled single-stage
Performance data

R449A | 50 Hz

Type	Amb. temp. °C		Cooling capacity Q_o [W] / Power consumption P_e [kW] — Evaporating temperature °C: 5	0	-5	-10	-15	-20	-25	-30
SHG44e/565-4 SL	50	Q	-	-	22500	18400	14800	11600	8820	6410
		P	-	-	13.6	12.2	10.8	9.49	8.19	6.96
	46	Q	34500	29100	24200	19900	16100	12700	9750	7210
		P	16.1	14.7	13.4	12.0	10.7	9.51	8.28	7.11
	43	Q	36200	30600	25500	21000	17000	13500	10500	7790
		P	15.8	14.5	13.2	11.9	10.7	9.49	8.31	7.18
	38	Q	39100	33200	27700	22900	18600	14800	11600	8720
		P	15.2	14.0	12.8	11.6	10.5	9.40	8.29	7.23
	32	Q	42700	36200	30400	25100	20500	16400	12900	9780
		P	14.4	13.3	12.3	11.2	10.2	9.19	8.18	7.21
	27	Q	45600	38700	32500	26900	22000	17600	13900	10700
		P	13.7	12.7	11.7	10.8	9.88	8.94	8.02	7.12
	15	Q	52700	44800	37700	31300	25500	20500	16200	12500
		P	11.6	10.9	10.3	9.61	8.91	8.21	7.49	6.78
SHG44e/665-4 L	50	Q	-	-	-	-	15800	12400	9380	6730
		P	-	-	-	-	12.3	10.7	9.13	7.66
	46	Q	-	-	-	21300	17300	13700	10500	7660
		P	-	-	-	13.9	12.3	10.7	9.26	7.85
	43	Q	-	-	-	22600	18400	14600	11300	8330
		P	-	-	-	13.8	12.2	10.7	9.31	7.95
	38	Q	-	-	29800	24700	20200	16200	12600	9430
		P	-	-	15.1	13.5	12.1	10.6	9.32	8.04
	32	Q	-	-	32800	27300	22400	18000	14100	10700
		P	-	-	14.5	13.1	11.7	10.4	9.22	8.03
	27	Q	-	41800	35300	29400	24100	19400	15300	11700
		P	-	15.3	13.9	12.6	11.4	10.2	9.06	7.95
	15	Q	-	48800	41400	34500	28400	22900	18100	14000
		P	-	13.4	12.3	11.3	10.3	9.41	8.48	7.57
SHG44e/665-4 SL	50	Q	-	-	-	20300	16300	12800	9610	6880
		P	-	-	-	14.0	12.3	10.7	9.20	7.75
	46	Q	-	32100	26800	22000	17800	14000	10700	7820
		P	-	17.2	15.5	13.8	12.3	10.7	9.31	7.92
	43	Q	40000	33900	28300	23400	18900	15000	11500	8500
		P	18.6	16.9	15.3	13.7	12.2	10.7	9.36	8.01
	38	Q	43400	36900	30900	25500	20800	16500	12800	9600
		P	17.9	16.4	14.9	13.4	12.0	10.6	9.35	8.09
	32	Q	47500	40400	34000	28200	23000	18400	14400	10900
		P	17.0	15.6	14.3	12.9	11.7	10.4	9.23	8.07
	27	Q	50900	43400	36500	30300	24800	19900	15600	11900
		P	16.2	14.9	13.7	12.5	11.3	10.1	9.06	7.98
	15	Q	59100	50500	42600	35500	29000	23300	18400	14200
		P	13.9	12.9	12.0	11.1	10.2	9.34	8.46	7.59
SHG44e/770-4 L	50	Q	-	-	-	-	18700	14800	11300	8190
		P	-	-	-	-	13.9	12.0	10.2	8.57
	46	Q	-	-	-	25100	20400	16300	12600	9270
		P	-	-	-	15.8	13.9	12.1	10.4	8.79
	43	Q	-	-	-	26600	21700	17300	13500	10100
		P	-	-	-	15.7	13.9	12.1	10.4	8.90
	38	Q	-	-	34900	29000	23800	19100	15000	11400
		P	-	-	17.2	15.4	13.7	12.0	10.5	9.01
	32	Q	-	-	38300	32000	26300	21200	16700	12800
		P	-	-	16.5	14.9	13.3	11.8	10.3	9.01
	27	Q	-	48700	41200	34400	28300	22900	18100	13900
		P	-	17.5	15.9	14.4	12.9	11.5	10.2	8.91
	15	Q	-	56700	48100	40300	33100	26800	21200	16500
		P	-	15.3	14.0	12.8	11.7	10.6	9.52	8.47

Relating to 20 °C suction gas temperature without liquid subcooling

Supplementary cooling or reduced suction gas temperature

vap.bock.de

SHG condensing units air-cooled single-stage
Performance data

R449A | 50 Hz

Type	Amb. temp. °C		Cooling capacity Q_o [W] / Power consumption P_e [kW] — Evaporating temperature °C: 5	0	-5	-10	-15	-20	-25	-30
SHG44e/770-4 SL	50	Q	-	-	-	24100	19400	15300	11700	8440
		P	-	-	-	16.5	14.5	12.6	10.8	9.20
	46	Q	-	37800	31600	26100	21100	16800	12900	9490
		P	-	20.2	18.2	16.3	14.5	12.7	11.0	9.40
	43	Q	46900	39800	33400	27600	22400	17800	13800	10300
		P	21.8	19.9	18.0	16.2	14.4	12.7	11.0	9.50
	38	Q	50800	43200	36300	30000	24500	19600	15300	11600
		P	21.1	19.3	17.5	15.8	14.2	12.6	11.0	9.59
	32	Q	55400	47200	39700	33000	26900	21600	17000	13000
		P	20.0	18.4	16.8	15.3	13.8	12.3	10.9	9.57
	27	Q	59300	50600	42600	35400	29000	23300	18400	14100
		P	19.1	17.6	16.1	14.7	13.3	12.0	10.7	9.46
	15	Q	68700	58800	49600	41300	33800	27200	21500	16600
		P	16.4	15.3	14.2	13.1	12.0	11.0	10.0	9.01
SHG56e/850-4 L	50	Q	-	-	-	-	20300	16200	12500	9080
		P	-	-	-	-	15.2	13.0	11.0	9.18
	46	Q	-	-	-	27100	22200	17800	13800	10300
		P	-	-	-	17.3	15.2	13.1	11.2	9.43
	43	Q	-	-	-	28700	23600	19000	14800	11100
		P	-	-	-	17.2	15.1	13.2	11.3	9.57
	38	Q	-	-	37500	31400	25900	20900	16400	12500
		P	-	-	19.0	16.9	15.0	13.1	11.3	9.70
	32	Q	-	-	41300	34600	28600	23100	18300	14100
		P	-	-	18.3	16.4	14.6	12.9	11.2	9.71
	27	Q	-	52200	44400	37300	30800	25000	19800	15300
		P	-	19.4	17.6	15.8	14.2	12.6	11.0	9.62
	15	Q	-	60900	51900	43600	36000	29200	23300	18100
		P	-	17.1	15.6	14.2	12.8	11.5	10.3	9.14
SHG56e/850-4 SL	50	Q	-	-	-	26300	21300	16900	12900	9380
		P	-	-	-	17.9	15.7	13.7	11.7	9.91
	46	Q	-	-	34400	28400	23100	18400	14300	10600
		P	-	-	19.9	17.8	15.7	13.8	11.9	10.1
	43	Q	-	43100	36300	30100	24500	19600	15200	11400
		P	-	21.8	19.7	17.6	15.6	13.7	11.9	10.2
	38	Q	54700	46700	39400	32800	26800	21500	16900	12800
		P	23.2	21.1	19.2	17.3	15.4	13.6	11.9	10.3
	32	Q	59700	51100	43200	36000	29500	23800	18700	14400
		P	22.1	20.2	18.4	16.7	15.0	13.4	11.8	10.3
	27	Q	64000	54800	46300	38600	31700	25600	20200	15600
		P	21.1	19.4	17.7	16.1	14.6	13.1	11.6	10.2
	15	Q	74200	63700	53900	45000	37000	29900	23700	18400
		P	18.3	17.0	15.7	14.4	13.2	12.0	10.9	9.77
SHG56e/995-4 L	50	Q	-	-	-	-	24700	19700	15100	10800
		P	-	-	-	-	19.0	16.3	13.8	11.5
	46	Q	-	-	-	32600	26800	21400	16600	12100
		P	-	-	-	21.4	18.8	16.3	13.9	11.6
	43	Q	-	-	-	34400	28300	22700	17700	13100
		P	-	-	-	21.1	18.6	16.2	13.9	11.7
	38	Q	-	-	44500	37300	30800	24900	19500	14700
		P	-	-	23.0	20.6	18.2	16.0	13.8	11.8
	32	Q	-	-	48700	41000	33900	27400	21700	16500
		P	-	-	22.1	19.9	17.7	15.7	13.7	11.8
	27	Q	-	61300	52300	44000	36400	29600	23400	18000
		P	-	23.5	21.3	19.2	17.2	15.3	13.5	11.7
	15	Q	-	71500	61000	51400	42500	34600	27600	21500
		P	-	20.7	18.9	17.2	15.6	14.1	12.7	11.3

Relating to 20 °C suction gas temperature without liquid subcooling

Supplementary cooling or reduced suction gas temperature

vap.bock.de

SHG condensing units air-cooled single-stage
Performance data

R449A | 50 Hz

Type	Amb. temp. °C		Cooling capacity Q_o [W] / Power consumption P_e [kW] — Evaporating temperature °C: 5	0	-5	-10	-15	-20	-25	-30
SHG56e/995-4 SL	50	Q	-	-	-	-	24800	19800	15100	10800
		P	-	-	-	-	18.9	16.3	13.8	11.5
	46	Q	-	-	-	32700	26800	21500	16600	12100
		P	-	-	-	21.3	18.8	16.3	13.9	11.6
	43	Q	-	-	41200	34500	28400	22800	17700	13100
		P	-	-	23.7	21.1	18.6	16.2	13.9	11.7
	38	Q	60900	52500	44700	37500	30900	24900	19500	14700
		P	28.1	25.5	23.0	20.6	18.2	16.0	13.9	11.8
	32	Q	66600	57500	49000	41100	34000	27500	21700	16500
		P	26.9	24.4	22.1	19.9	17.7	15.7	13.7	11.8
	27	Q	71300	61600	52500	44100	36500	29600	23500	18100
		P	25.7	23.4	21.3	19.2	17.2	15.3	13.5	11.7
	15	Q	83000	71700	61200	51500	42600	34600	27600	21500
		P	22.7	20.7	18.9	17.2	15.6	14.1	12.7	11.3
SHG56e/1155-4 L	50	Q	-	-	-	-	-	21100	16300	-
		P	-	-	-	-	-	18.2	15.3	-
	46	Q	-	-	-	35200	28900	23200	18000	13400
		P	-	-	-	24.4	21.3	18.4	15.6	13.0
	43	Q	-	-	-	37300	30700	24700	19400	14600
		P	-	-	-	24.3	21.3	18.4	15.7	13.2
	38	Q	-	-	-	40800	33700	27300	21500	16400
		P	-	-	-	24.0	21.1	18.4	15.8	13.4
	32	Q	-	-	53500	45000	37300	30300	24000	18500
		P	-	-	26.2	23.3	20.6	18.1	15.7	13.5
	27	Q	-	-	57600	48600	40300	32800	26100	20200
		P	-	-	25.3	22.6	20.1	17.7	15.5	13.4
	15	Q	-	78900	67600	57000	47300	38600	30800	24000
		P	-	25.2	22.7	20.5	18.4	16.4	14.5	12.8
SHG56e/1155-4 SL	50	Q	-	-	-	-	27500	21800	16700	12200
		P	-	-	-	-	21.3	18.4	15.6	12.9
	46	Q	-	-	-	36800	30000	24000	18600	13800
		P	-	-	-	24.3	21.3	18.5	15.8	13.3
	43	Q	-	-	46800	39000	31900	25600	19900	15000
		P	-	-	27.2	24.2	21.3	18.5	15.9	13.5
	38	Q	70300	60300	51100	42600	35000	28200	22200	16800
		P	32.7	29.6	26.6	23.7	21.0	18.4	16.0	13.6
	32	Q	76900	66200	56200	47000	38700	31300	24700	19000
		P	31.3	28.4	25.6	23.0	20.5	18.1	15.8	13.6
	27	Q	82600	71100	60400	50600	41700	33800	26800	20700
		P	30.0	27.3	24.7	22.2	19.9	17.7	15.5	13.5
	15	Q	96200	83000	70600	59300	48900	39700	31500	24500
		P	26.3	24.1	21.9	20.0	18.1	16.3	14.5	12.8
SHG66e/1340-4 L	50	Q	-	-	-	-	-	24100	18600	13500
		P	-	-	-	-	-	20.4	17.1	14.0
	46	Q	-	-	-	-	32600	26300	20400	15000
		P	-	-	-	-	23.8	20.5	17.3	14.4
	43	Q	-	-	-	41800	34500	27900	21800	16200
		P	-	-	-	27.2	23.7	20.5	17.4	14.5
	38	Q	-	-	53900	45600	37800	30600	24100	18100
		P	-	-	30.3	26.8	23.5	20.4	17.5	14.8
	32	Q	-	-	59300	50200	41700	33900	26800	20500
		P	-	-	29.5	26.1	23.0	20.1	17.4	14.9
	27	Q	-	74300	63900	54100	45000	36700	29200	22400
		P	-	32.1	28.7	25.5	22.5	19.8	17.2	14.8
	15	Q	-	87100	75000	63600	53100	43400	34800	27100
		P	-	29.3	26.3	23.5	20.9	18.5	16.4	14.4

Relating to 20 °C suction gas temperature without liquid subcooling

Supplementary cooling and reduced suction gas temperature

Supplementary cooling or reduced suction gas temperature

vap.bock.de

SHG condensing units air-cooled single-stage
Performance data

R449A | 50 Hz

Type	Amb. temp. °C		Cooling capacity Q_o [W] / Power consumption P_e [kW] — Evaporating temperature °C: 5	0	-5	-10	-15	-20	-25	-30
SHG66e/1340-4 SL	50	Q	-	-	-	-	-	25000	19200	13800
		P	-	-	-	-	-	20.6	17.4	14.4
	46	Q	-	-	-	41500	34100	27300	21100	15400
		P	-	-	-	27.3	23.9	20.6	17.6	14.7
	43	Q	-	-	52400	43900	36100	29000	22500	16600
		P	-	-	30.6	27.1	23.8	20.6	17.6	14.9
	38	Q	-	67000	57100	47900	39500	31800	24900	18600
		P	-	33.5	30.0	26.6	23.5	20.5	17.7	15.1
	32	Q	85000	73500	62700	52700	43500	35200	27700	21100
		P	35.9	32.3	29.0	25.9	22.9	20.2	17.6	15.1
	27	Q	91300	79000	67500	56800	47000	38100	30100	23100
		P	34.6	31.3	28.1	25.2	22.4	19.8	17.3	15.1
	15	Q	107000	92400	79000	66600	55200	44900	35800	27800
		P	31.3	28.3	25.6	23.0	20.7	18.5	16.4	14.5

Relating to 20 °C suction gas temperature without liquid subcooling

Supplementary cooling and reduced suction gas temperature

Supplementary cooling or reduced suction gas temperature

vap.bock.de

Operating limits

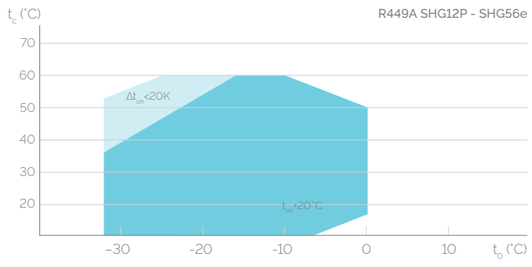

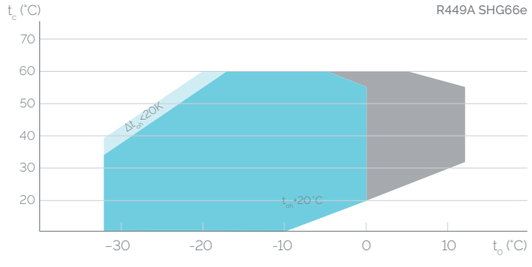

t_o Evaporating temperature (°C)
t_c Condensing temperature (°C)
Δt_{oh} Suction gas superheat (K)
t_{oh} Suction gas temperature (°C)

- Unlimited application range
- Supplementary cooling or reduced suction gas temperature (Δt_{oh}<20K)
- Motor version -S- (more powerful motor)

Max. permissible operating pressure (LP/HP) [1]: 19/28 bar
[1] LP = low pressure, HP = high pressure

SHG condensing units air-cooled single-stage
Performance data

R22 | 50 Hz

Type	Amb. temp. °C		Cooling capacity Q_o [W]						Power consumption P_e [kW]		
			Evaporating temperature °C								
			5	0	-5	-10	-15	-20	-25	-30	-35
SHG12P/60-4 SL	50	Q	3630	3030	2490	2000	1570	1190	-	-	-
		P	1.79	1.67	1.54	1.42	1.29	1.17	-	-	-
	46	Q	3850	3220	2650	2140	1690	1290	928	-	-
		P	1.73	1.61	1.50	1.38	1.27	1.15	1.04	-	-
	43	Q	4020	3360	2780	2250	1790	1370	1000	670	-
		P	1.68	1.57	1.46	1.36	1.25	1.14	1.03	0.928	-
	38	Q	4310	3620	2990	2440	1940	1510	1130	783	478
		P	1.58	1.49	1.40	1.31	1.21	1.11	1.01	0.916	0.821
	32	Q	4670	3930	3260	2670	2140	1680	1280	924	613
		P	1.47	1.40	1.32	1.24	1.16	1.07	0.987	0.899	0.812
	27	Q	4980	4190	3490	2860	2310	1830	1410	1050	728
		P	1.36	1.30	1.24	1.18	1.11	1.03	0.960	0.881	0.801
	15	Q	5740	4850	4060	3350	2740	-	-	-	-
		P	1.07	1.06	1.03	1.01	0.973	-	-	-	-
SHG12P/75-4 L	50	Q	-	-	3030	2450	1920	1450	-	-	-
		P	-	-	1.89	1.72	1.56	1.40	-	-	-
	46	Q	-	-	3230	2620	2070	1580	1140	-	-
		P	-	-	1.83	1.68	1.53	1.38	1.24	-	-
	43	Q	-	-	3380	2750	2190	1680	1230	821	-
		P	-	-	1.79	1.65	1.51	1.36	1.23	1.09	-
	38	Q	-	-	3640	2980	2380	1850	1380	961	585
		P	-	-	1.72	1.59	1.46	1.33	1.20	1.08	0.965
	32	Q	-	-	3970	3260	2620	2060	1570	1140	752
		P	-	-	1.62	1.51	1.40	1.28	1.17	1.06	0.953
	27	Q	-	-	4250	3500	2830	2250	1730	1290	895
		P	-	-	1.53	1.44	1.34	1.24	1.14	1.04	0.940
	15	Q	-	-	4950	4100	3350	2700	-	-	-
		P	-	-	1.28	1.23	1.17	1.11	-	-	-
SHG12P/75-4 SL	50	Q	4380	3670	3030	2450	1920	1450	-	-	-
		P	2.22	2.05	1.89	1.72	1.56	1.40	-	-	-
	46	Q	4660	3900	3230	2620	2070	1580	1140	-	-
		P	2.14	1.99	1.83	1.68	1.53	1.38	1.24	-	-
	43	Q	4860	4080	3380	2750	2190	1680	1230	821	-
		P	2.08	1.94	1.79	1.65	1.51	1.36	1.23	1.09	-
	38	Q	5220	4390	3640	2980	2380	1850	1380	961	585
		P	1.97	1.85	1.72	1.59	1.46	1.33	1.20	1.08	0.965
	32	Q	5650	4770	3970	3260	2620	2060	1570	1140	752
		P	1.83	1.73	1.62	1.51	1.40	1.28	1.17	1.06	0.953
	27	Q	6020	5090	4250	3500	2830	2250	1730	1290	895
		P	1.71	1.62	1.53	1.44	1.34	1.24	1.14	1.04	0.940
	15	Q	6950	5900	4950	4100	3350	2700	-	-	-
		P	1.36	1.32	1.28	1.23	1.17	1.11	-	-	-
SHG12P/90-4 L	50	Q	-	-	3520	2850	2250	-	-	-	-
		P	-	-	2.23	2.02	1.82	-	-	-	-
	46	Q	-	-	3750	3050	2420	1850	1340	-	-
		P	-	-	2.17	1.97	1.79	1.61	1.43	-	-
	43	Q	-	-	3930	3210	2560	1970	1440	962	-
		P	-	-	2.12	1.94	1.76	1.59	1.42	1.26	-
	38	Q	-	-	4240	3470	2780	2170	1620	1130	684
		P	-	-	2.03	1.87	1.71	1.55	1.39	1.24	1.10
	32	Q	-	-	4620	3800	3070	2420	1840	1340	881
		P	-	-	1.92	1.78	1.64	1.49	1.35	1.22	1.09
	27	Q	-	-	4950	4080	3310	2630	2030	1510	1050
		P	-	-	1.81	1.69	1.57	1.44	1.32	1.19	1.07
	15	Q	-	-	5770	4790	3930	3170	2510	-	-
		P	-	-	1.53	1.45	1.38	1.29	1.20	-	-

Relating to 20 °C suction gas temperature without liquid subcooling

Supplementary cooling and reduced suction gas temperature

Supplementary cooling or reduced suction gas temperature

vap.bock.de

SHG condensing units air-cooled single-stage
Performance data

R22 | 50 Hz

Type	Amb. temp. °C		Cooling capacity Q_o [W]						Power consumption P_e [kW]		
			Evaporating temperature °C								
			5	0	-5	-10	-15	-20	-25	-30	-35
SHG12P/90-4 SL	50	Q	5070	4260	3520	2850	2250	-	-	-	-
		P	2.65	2.43	2.23	2.02	1.82	-	-	-	-
	46	Q	5380	4530	3750	3050	2420	1850	1340	-	-
		P	2.56	2.36	2.17	1.97	1.79	1.61	1.43	-	-
	43	Q	5620	4740	3930	3210	2560	1970	1440	962	-
		P	2.49	2.30	2.12	1.94	1.76	1.59	1.42	1.26	-
	38	Q	6030	5090	4240	3470	2780	2170	1620	1130	684
		P	2.36	2.20	2.03	1.87	1.71	1.55	1.39	1.24	1.10
	32	Q	6540	5530	4620	3800	3070	2420	1840	1340	881
		P	2.20	2.06	1.92	1.78	1.64	1.49	1.35	1.22	1.09
	27	Q	6970	5910	4950	4080	3310	2630	2030	1510	1050
		P	2.06	1.94	1.81	1.69	1.57	1.44	1.32	1.19	1.07
	15	Q	8050	6860	5770	4790	3930	3170	2510	-	-
		P	1.67	1.60	1.53	1.45	1.38	1.29	1.20	-	-
SHG12P/110-4 L	50	Q	-	-	4030	3280	2590	-	-	-	-
		P	-	-	2.60	2.35	2.11	-	-	-	-
	46	Q	-	-	4300	3510	2790	2140	-	-	-
		P	-	-	2.53	2.30	2.07	1.85	-	-	-
	43	Q	-	-	4510	3680	2940	2270	1660	-	-
		P	-	-	2.48	2.26	2.04	1.83	1.63	-	-
	38	Q	-	-	4860	3990	3210	2500	1870	1300	788
		P	-	-	2.38	2.18	1.98	1.79	1.60	1.42	1.25
	32	Q	-	-	5300	4370	3530	2790	2130	1540	1020
		P	-	-	2.25	2.07	1.90	1.73	1.56	1.39	1.23
	27	Q	-	-	5670	4690	3820	3040	2350	1750	1220
		P	-	-	2.14	1.98	1.82	1.67	1.51	1.36	1.22
	15	Q	-	-	6610	5510	4530	3660	2900	2250	-
		P	-	-	1.82	1.71	1.60	1.50	1.39	1.27	-
SHG12P/110-4 SL	50	Q	5760	4860	4030	3280	2590	-	-	-	-
		P	3.12	2.86	2.60	2.35	2.11	-	-	-	-
	46	Q	6120	5170	4300	3510	2790	2140	-	-	-
		P	3.02	2.77	2.53	2.30	2.07	1.85	-	-	-
	43	Q	6390	5410	4510	3680	2940	2270	1660	-	-
		P	2.94	2.71	2.48	2.26	2.04	1.83	1.63	-	-
	38	Q	6860	5820	4860	3990	3210	2500	1870	1300	788
		P	2.81	2.59	2.38	2.18	1.98	1.79	1.60	1.42	1.25
	32	Q	7440	6320	5300	4370	3530	2790	2130	1540	1020
		P	2.63	2.44	2.25	2.07	1.90	1.73	1.56	1.39	1.23
	27	Q	7940	6750	5670	4690	3820	3040	2350	1750	1220
		P	2.47	2.30	2.14	1.98	1.82	1.67	1.51	1.36	1.22
	15	Q	9170	7840	6610	5510	4530	3660	2900	2250	-
		P	2.03	1.92	1.82	1.71	1.60	1.50	1.39	1.27	-
SHG22e/125-4 L	50	Q	-	-	4890	4090	-	-	-	-	-
		P	-	-	3.11	2.76	-	-	-	-	-
	46	Q	-	-	5220	4370	3600	2890	-	-	-
		P	-	-	3.03	2.71	2.40	2.11	-	-	-
	43	Q	-	-	5470	4590	3780	3050	2400	-	-
		P	-	-	2.97	2.66	2.37	2.09	1.84	-	-
	38	Q	-	-	5910	4960	4100	3330	2640	2030	-
		P	-	-	2.85	2.57	2.30	2.05	1.82	1.60	-
	32	Q	-	-	6450	5420	4490	3660	2920	2280	1720
		P	-	-	2.70	2.45	2.21	1.98	1.77	1.57	1.39
	27	Q	-	-	6910	5810	4810	3920	3140	2470	1900
		P	-	-	2.57	2.34	2.12	1.91	1.72	1.53	1.36
	15	Q	-	-	8000	6700	5520	4480	3570	2790	-
		P	-	-	2.22	2.04	1.87	1.71	1.54	1.39	-

Relating to 20 °C suction gas temperature without liquid subcooling

Supplementary cooling and reduced suction gas temperature

Supplementary cooling or reduced suction gas temperature

vap.bock.de

SHG condensing units air-cooled single-stage
Performance data

R22 | 50 Hz

Type	Amb. temp. °C		Cooling capacity Q_o [W]								Power consumption P_e [kW]
			Evaporating temperature °C								
			5	0	-5	-10	-15	-20	-25	-30	-35
SHG22e/125-4 SL	50	Q	7100	6050	5100	4230	3450	-	-	-	-
		P	3.77	3.41	3.07	2.74	2.42	-	-	-	-
	46	Q	7600	6480	5460	4540	3720	2980	-	-	-
		P	3.62	3.29	2.97	2.67	2.38	2.10	-	-	-
	43	Q	7980	6810	5740	4780	3920	3150	2470	-	-
		P	3.51	3.20	2.90	2.61	2.34	2.08	1.83	-	-
	38	Q	8620	7360	6210	5180	4260	3440	2720	2090	1530
		P	3.31	3.04	2.77	2.51	2.27	2.03	1.80	1.59	1.40
	32	Q	9400	8020	6780	5650	4650	3770	3000	2330	1760
		P	3.08	2.84	2.61	2.38	2.16	1.95	1.75	1.56	1.38
	27	Q	10100	8580	7240	6030	4960	4020	3210	2510	1920
		P	2.87	2.67	2.47	2.27	2.07	1.88	1.70	1.52	1.35
	15	Q	11600	9870	8310	6890	5640	4540	3600	2810	-
		P	2.38	2.25	2.11	1.96	1.82	1.67	1.52	1.38	-
SHG22e/160-4 L	50	Q	-	-	6030	5030	-	-	-	-	-
		P	-	-	3.79	3.36	-	-	-	-	-
	46	Q	-	-	6470	5400	4440	3570	-	-	-
		P	-	-	3.68	3.28	2.90	2.55	-	-	-
	43	Q	-	-	6800	5690	4680	3780	2970	-	-
		P	-	-	3.60	3.22	2.86	2.52	2.21	-	-
	38	Q	-	-	7370	6170	5090	4130	3270	2520	-
		P	-	-	3.45	3.10	2.77	2.46	2.18	1.92	-
	32	Q	-	-	8050	6750	5580	4540	3630	2830	2140
		P	-	-	3.26	2.95	2.65	2.38	2.12	1.88	1.66
	27	Q	-	-	8620	7230	5980	4860	3890	3060	2340
		P	-	-	3.09	2.81	2.55	2.29	2.05	1.83	1.62
	15	Q	-	-	9950	8300	6830	5530	4400	3440	2650
		P	-	-	2.66	2.45	2.25	2.05	1.85	1.66	1.48
SHG22e/160-4 SL	50	Q	-	7130	6030	5030	-	-	-	-	-
		P	-	4.24	3.78	3.35	-	-	-	-	-
	46	Q	8890	7630	6470	5410	4440	3560	-	-	-
		P	4.55	4.10	3.68	3.27	2.90	2.54	-	-	-
	43	Q	9340	8020	6800	5690	4680	3780	2970	-	-
		P	4.42	3.99	3.59	3.21	2.85	2.52	2.21	-	-
	38	Q	10100	8680	7370	6170	5090	4130	3270	2520	-
		P	4.19	3.81	3.44	3.10	2.77	2.46	2.18	1.91	-
	32	Q	11100	9480	8050	6750	5580	4540	3620	2830	2150
		P	3.91	3.58	3.25	2.95	2.66	2.38	2.12	1.88	1.66
	27	Q	11900	10200	8620	7230	5970	4860	3890	3060	2350
		P	3.68	3.38	3.09	2.81	2.55	2.29	2.05	1.83	1.62
	15	Q	13700	11800	9940	8300	6830	5530	4400	3440	2660
		P	3.09	2.87	2.66	2.45	2.25	2.05	1.85	1.66	1.48
SHG22e/190-4 L	50	Q	-	-	7450	6180	5030	-	-	-	-
		P	-	-	4.80	4.30	3.83	-	-	-	-
	46	Q	-	-	8070	6710	5480	4390	-	-	-
		P	-	-	4.65	4.19	3.75	3.34	-	-	-
	43	Q	-	-	8530	7100	5810	4670	3660	-	-
		P	-	-	4.53	4.10	3.69	3.30	2.94	-	-
	38	Q	-	-	9280	7730	6350	5130	4060	3120	2280
		P	-	-	4.32	3.94	3.57	3.22	2.89	2.59	2.31
	32	Q	-	-	10200	8450	6950	5630	4480	3490	2640
		P	-	-	4.07	3.74	3.42	3.11	2.81	2.53	2.27
	27	Q	-	-	10900	9020	7410	6000	4790	3750	2870
		P	-	-	3.85	3.56	3.28	3.00	2.73	2.47	2.22
	15	Q	-	-	12400	10300	8360	6720	5330	4160	3200
		P	-	-	3.34	3.13	2.92	2.70	2.48	2.27	2.05

Relating to 20 °C suction gas temperature without liquid subcooling

Supplementary cooling and reduced suction gas temperature

Supplementary cooling or reduced suction gas temperature

vap.bock.de

SHG condensing units air-cooled single-stage
Performance data

R22 | 50 Hz

Type	Amb. temp. °C		Cooling capacity Q_o [W]								Power consumption P_e [kW]
			Evaporating temperature °C								
			5	0	-5	-10	-15	-20	-25	-30	-35
SHG22e/190-4 SL	50	Q	10400	8830	7440	6180	5050	-	-	-	-
		P	5.86	5.31	4.78	4.29	3.81	-	-	-	-
	46	Q	11200	9540	8050	6700	5480	4400	-	-	-
		P	5.61	5.11	4.63	4.18	3.74	3.33	-	-	-
	43	Q	11900	10100	8510	7080	5810	4680	3670	-	-
		P	5.43	4.96	4.52	4.09	3.68	3.29	2.93	-	-
	38	Q	12900	11000	9260	7710	6340	5120	4050	3120	2290
		P	5.12	4.71	4.31	3.93	3.57	3.22	2.89	2.58	2.29
	32	Q	14100	12100	10200	8440	6940	5620	4470	3480	2630
		P	4.75	4.40	4.06	3.74	3.42	3.11	2.81	2.53	2.27
	27	Q	15100	12900	10900	9010	7400	6000	4780	3740	2860
		P	4.45	4.15	3.85	3.56	3.28	3.00	2.73	2.47	2.22
	15	Q	17300	14700	12400	10300	8360	6730	5330	4160	3210
		P	3.74	3.54	3.34	3.13	2.92	2.71	2.49	2.27	2.06
SHG34e/215-4 L	50	Q	-	-	7780	6330	-	-	-	-	-
		P	-	-	5.36	4.84	-	-	-	-	-
	46	Q	-	-	8420	6880	5470	4190	-	-	-
		P	-	-	5.20	4.72	4.25	3.81	-	-	-
	43	Q	-	-	8890	7280	5820	4490	3290	-	-
		P	-	-	5.08	4.62	4.18	3.76	3.35	-	-
	38	Q	-	-	9680	7950	6400	5000	3740	2610	1590
		P	-	-	4.86	4.45	4.05	3.66	3.29	2.93	2.59
	32	Q	-	-	10600	8750	7080	5590	4270	3090	2050
		P	-	-	4.59	4.23	3.88	3.54	3.20	2.87	2.55
	27	Q	-	-	11400	9400	7640	6080	4700	3490	2430
		P	-	-	4.36	4.04	3.73	3.42	3.12	2.82	2.52
	15	Q	-	-	13200	10900	8930	7200	5690	4390	3280
		P	-	-	3.76	3.55	3.34	3.12	2.89	2.66	2.42
SHG34e/215-4 SL	50	Q	-	9360	7780	6330	-	-	-	-	-
		P	-	5.90	5.36	4.84	-	-	-	-	-
	46	Q	12000	10200	8420	6880	5470	4190	-	-	-
		P	6.22	5.70	5.20	4.72	4.25	3.81	-	-	-
	43	Q	12600	10700	8890	7280	5820	4490	3290	-	-
		P	6.04	5.55	5.08	4.62	4.18	3.76	3.35	-	-
	38	Q	13700	11600	9680	7950	6400	5000	3740	2610	1590
		P	5.73	5.29	4.86	4.45	4.05	3.66	3.29	2.93	2.59
	32	Q	14900	12700	10600	8750	7080	5590	4270	3090	2050
		P	5.34	4.96	4.59	4.23	3.88	3.54	3.20	2.87	2.55
	27	Q	16000	13600	11400	9400	7640	6080	4700	3490	2430
		P	5.01	4.68	4.36	4.04	3.73	3.42	3.12	2.82	2.52
	15	Q	18300	15600	13200	10900	8930	7200	5690	4390	3280
		P	4.18	3.97	3.76	3.55	3.34	3.12	2.89	2.66	2.42
SHG34e/255-4 L	50	Q	-	-	8840	7220	-	-	-	-	-
		P	-	-	6.27	5.64	-	-	-	-	-
	46	Q	-	-	9580	7850	6260	4810	-	-	-
		P	-	-	6.09	5.50	4.93	4.40	-	-	-
	43	Q	-	-	10200	8320	6660	5160	3780	-	-
		P	-	-	5.95	5.39	4.85	4.34	3.85	-	-
	38	Q	-	-	11100	9090	7330	5740	4300	3000	1820
		P	-	-	5.71	5.20	4.70	4.23	3.78	3.35	2.94
	32	Q	-	-	12100	10100	8120	6430	4910	3560	2360
		P	-	-	5.41	4.95	4.51	4.09	3.68	3.28	2.91
	27	Q	-	-	13000	10800	8770	6990	5410	4020	2800
		P	-	-	5.14	4.74	4.34	3.96	3.58	3.22	2.87
	15	Q	-	-	15000	12600	10300	8300	6570	5070	3790
		P	-	-	4.47	4.18	3.90	3.61	3.33	3.04	2.75

Relating to 20 °C suction gas temperature without liquid subcooling

Supplementary cooling and reduced suction gas temperature

Supplementary cooling or reduced suction gas temperature

vap.bock.de

SHG condensing units air-cooled single-stage
Performance data

R22 | 50 Hz

Type	Amb. temp. °C		Cooling capacity Q_o [W]								Power consumption P_e [kW]
			Evaporating temperature °C								
			5	0	-5	-10	-15	-20	-25	-30	-35
SHG34e/255-4 SL	50	Q	-	-	8840	7220	-	-	-	-	-
		P	-	-	6.27	5.64	-	-	-	-	-
	46	Q	13500	11500	9580	7850	6260	4810	-	-	-
		P	7.37	6.72	6.09	5.50	4.93	4.40	-	-	-
	43	Q	14200	12100	10200	8320	6660	5160	3780	-	-
		P	7.17	6.55	5.95	5.39	4.85	4.34	3.85	-	-
	38	Q	15500	13200	11100	9090	7330	5740	4300	3000	1820
		P	6.82	6.25	5.71	5.20	4.70	4.23	3.78	3.35	2.94
	32	Q	16900	14400	12100	10100	8120	6430	4910	3560	2360
		P	6.38	5.88	5.41	4.95	4.51	4.09	3.68	3.28	2.91
	27	Q	18100	15400	13000	10800	8770	6990	5410	4020	2800
		P	6.01	5.57	5.14	4.74	4.34	3.96	3.58	3.22	2.87
	15	Q	20800	17800	15000	12600	10300	8300	6570	5070	3790
		P	5.08	4.77	4.47	4.18	3.90	3.61	3.33	3.04	2.75
SHG34e/315-4 L	50	Q	-	-	-	-	-	-	-	-	-
		P	-	-	-	-	-	-	-	-	-
	46	Q	-	-	11300	9260	7420	-	-	-	-
		P	-	-	7.53	6.75	6.02	-	-	-	-
	43	Q	-	-	11900	9820	7900	6130	-	-	-
		P	-	-	7.37	6.63	5.92	5.26	-	-	-
	38	Q	-	-	13000	10800	8700	6830	5130	3570	2150
		P	-	-	7.09	6.40	5.75	5.14	4.56	4.01	3.50
	32	Q	-	-	14300	11900	9660	7670	5870	4260	2810
		P	-	-	6.74	6.12	5.53	4.97	4.44	3.94	3.46
	27	Q	-	-	15300	12800	10500	8350	6480	4810	3340
		P	-	-	6.43	5.87	5.33	4.82	4.33	3.86	3.42
	15	Q	-	-	17800	14900	12300	9940	7890	6100	4560
		P	-	-	5.65	5.22	4.81	4.41	4.03	3.65	3.28
SHG34e/315-4 SL	50	Q	-	13600	11400	9220	7310	-	-	-	-
		P	-	8.69	7.90	7.14	6.42	-	-	-	-
	46	Q	17100	14500	12200	9910	7900	6070	-	-	-
		P	9.22	8.44	7.70	6.98	6.30	5.65	-	-	-
	43	Q	18000	15300	12800	10500	8360	6470	4750	-	-
		P	8.99	8.25	7.54	6.86	6.21	5.58	4.99	-	-
	38	Q	19300	16400	13800	11400	9130	7140	5350	3730	2260
		P	8.59	7.91	7.26	6.64	6.04	5.46	4.90	4.37	3.88
	32	Q	21000	17900	15000	12500	10100	7950	6080	4400	2910
		P	8.08	7.48	6.90	6.35	5.81	5.29	4.78	4.30	3.83
	27	Q	22400	19100	16100	13400	10900	8640	6690	4970	3450
		P	7.64	7.10	6.58	6.09	5.60	5.13	4.67	4.22	3.79
	15	Q	25700	22000	18600	15600	12800	10400	8170	6320	4740
		P	6.49	6.11	5.74	5.38	5.03	4.68	4.34	3.99	3.64
SHG34e/380-4 L	50	Q	-	-	13100	10800	-	-	-	-	-
		P	-	-	9.49	8.53	-	-	-	-	-
	46	Q	-	-	14100	11600	9240	7110	-	-	-
		P	-	-	9.27	8.35	7.49	6.68	-	-	-
	43	Q	-	-	14800	12200	9770	7580	5570	-	-
		P	-	-	9.09	8.21	7.38	6.60	5.86	-	-
	38	Q	-	-	16000	13200	10700	8370	6280	4380	2640
		P	-	-	8.77	7.96	7.18	6.45	5.76	5.11	4.49
	32	Q	-	-	17500	14500	11800	9340	7150	5180	3410
		P	-	-	8.36	7.63	6.93	6.26	5.62	5.02	4.45
	27	Q	-	-	18700	15600	12800	10200	7880	5850	4060
		P	-	-	8.00	7.33	6.69	6.08	5.49	4.93	4.39
	15	Q	-	-	21700	18200	15000	12200	9640	7460	5590
		P	-	-	7.04	6.52	6.04	5.57	5.11	4.66	4.22

Relating to 20 °C suction gas temperature without liquid subcooling

Supplementary cooling and reduced suction gas temperature

Supplementary cooling or reduced suction gas temperature

vap.bock.de

SHG condensing units air-cooled single-stage
Performance data

R22 | 50 Hz

Type	Amb. temp. °C		Cooling capacity Q_o [W]								Power consumption P_e [kW]
			Evaporating temperature °C								
			5	0	-5	-10	-15	-20	-25	-30	-35
SHG34e/380-4 SL	50	Q	-	16500	13800	11200	8850	-	-	-	-
		P	-	10.3	9.35	8.44	7.57	-	-	-	-
	46	Q	20800	17600	14700	12100	9590	7360	-	-	-
		P	10.9	10.0	9.10	8.24	7.42	6.64	-	-	-
	43	Q	21800	18500	15500	12700	10200	7840	5760	-	-
		P	10.6	9.76	8.91	8.09	7.30	6.55	5.83	-	-
	38	Q	23500	20000	16700	13800	11100	8660	6490	4530	2750
		P	10.1	9.35	8.57	7.82	7.09	6.40	5.73	5.09	4.49
	32	Q	25500	21700	18300	15100	12300	9650	7370	5340	3530
		P	9.54	8.82	8.13	7.47	6.82	6.19	5.58	5.00	4.44
	27	Q	27200	23200	19500	16200	13200	10500	8100	6010	4170
		P	9.01	8.36	7.75	7.15	6.57	6.00	5.45	4.91	4.38
	15	Q	31200	26700	22600	18800	15500	12500	9860	7620	5700
		P	7.62	7.17	6.73	6.31	5.89	5.47	5.05	4.63	4.20
SHG44e/475-4 L	50	Q	-	-	-	-	-	-	-	-	-
		P	-	-	-	-	-	-	-	-	-
	46	Q	-	-	19500	16300	13300	-	-	-	-
		P	-	-	11.3	10.1	9.00	-	-	-	-
	43	Q	-	-	20500	17100	14000	11200	-	-	-
		P	-	-	11.1	9.97	8.86	7.81	-	-	-
	38	Q	-	-	22100	18500	15200	12200	9470	7050	-
		P	-	-	10.7	9.64	8.61	7.63	6.69	5.81	-
	32	Q	-	-	23900	20100	16500	13400	10500	7950	5670
		P	-	-	10.2	9.22	8.28	7.38	6.53	5.72	4.96
	27	Q	-	-	25500	21400	17700	14300	11400	8680	6330
		P	-	-	9.76	8.85	7.98	7.16	6.37	5.62	4.92
	15	Q	-	-	29000	24400	20300	16600	13300	10400	7870
		P	-	-	8.61	7.89	7.21	6.55	5.92	5.32	4.75
SHG44e/475-4 SL	50	Q	29000	24400	20400	16700	13400	-	-	-	-
		P	14.3	13.2	12.1	11.0	10.0	-	-	-	-
	46	Q	30700	26000	21700	17800	14400	11400	-	-	-
		P	13.8	12.8	11.8	10.8	9.81	8.83	-	-	-
	43	Q	32100	27100	22700	18700	15100	12000	9160	-	-
		P	13.5	12.5	11.5	10.6	9.66	8.72	7.81	-	-
	38	Q	34200	29000	24300	20100	16300	13000	10100	7460	5140
		P	12.9	12.0	11.1	10.2	9.38	8.52	7.67	6.85	6.07
	32	Q	36700	31200	26200	21700	17800	14200	11100	8380	5970
		P	12.1	11.3	10.5	9.79	9.02	8.24	7.48	6.74	6.02
	27	Q	38800	33000	27800	23100	18900	15200	12000	9130	6650
		P	11.4	10.7	10.0	9.39	8.69	7.99	7.30	6.62	5.96
	15	Q	43600	37200	31400	26200	21600	17600	14000	10900	-
		P	9.80	9.33	8.85	8.36	7.85	7.33	6.81	6.28	-
SHG44e/565-4 L	50	Q	-	-	-	-	-	-	-	-	-
		P	-	-	-	-	-	-	-	-	-
	46	Q	-	-	22300	18700	-	-	-	-	-
		P	-	-	13.7	12.1	-	-	-	-	-
	43	Q	-	-	23400	19700	16300	13100	-	-	-
		P	-	-	13.4	11.9	10.5	9.18	-	-	-
	38	Q	-	-	25200	21300	17600	14300	11200	8370	-
		P	-	-	12.9	11.5	10.2	8.99	7.81	6.72	-
	32	Q	-	-	27400	23100	19200	15600	12400	9410	6750
		P	-	-	12.4	11.0	9.86	8.71	7.63	6.62	5.69
	27	Q	-	-	29100	24600	20500	16800	13400	10300	7520
		P	-	-	11.8	10.6	9.52	8.46	7.45	6.52	5.65
	15	Q	-	-	33200	28200	23500	19400	15600	12300	9320
		P	-	-	10.5	9.55	8.62	7.76	6.94	6.18	5.47

Relating to 20 °C suction gas temperature without liquid subcooling

Supplementary cooling and reduced suction gas temperature

Supplementary cooling or reduced suction gas temperature

vap.bock.de

SHG condensing units air-cooled single-stage
Performance data

R22 | 50 Hz

Type	Amb. temp. °C		Cooling capacity Q_o [W]								Power consumption P_e [kW]
			Evaporating temperature °C								
			5	0	-5	-10	-15	-20	-25	-30	-35
SHG44e/565-4 SL	50	Q	-	28800	24100	19800	16000	-	-	-	-
		P	-	15.5	14.2	12.8	11.5	-	-	-	-
	46	Q	36100	30600	25600	21200	17200	13600	-	-	-
		P	16.3	15.0	13.8	12.5	11.3	10.1	-	-	-
	43	Q	37600	31900	26800	22200	18000	14400	11100	-	-
		P	15.9	14.7	13.5	12.3	11.1	10.0	8.94	-	-
	38	Q	40100	34100	28700	23800	19500	15600	12100	9010	6270
		P	15.2	14.1	13.0	11.9	10.8	9.81	8.78	7.80	6.86
	32	Q	43100	36700	31000	25800	21100	17000	13300	10100	7240
		P	14.3	13.3	12.3	11.3	10.4	9.49	8.56	7.66	6.80
	27	Q	45500	38800	32800	27300	22500	18100	14400	11000	8030
		P	13.5	12.6	11.8	10.9	10.0	9.20	8.35	7.53	6.74
	15	Q	51200	43800	37000	31000	25600	20800	16700	13100	9880
		P	11.6	10.9	10.3	9.71	9.07	8.42	7.77	7.13	6.51
SHG44e/665-4 L	50	Q	-	-	26400	21800	-	-	-	-	-
		P	-	-	16.5	14.8	-	-	-	-	-
	46	Q	-	-	28200	23400	19000	15100	-	-	-
		P	-	-	16.1	14.5	12.9	11.5	-	-	-
	43	Q	-	-	29600	24600	20000	16000	12300	-	-
		P	-	-	15.8	14.2	12.7	11.3	10.0	-	-
	38	Q	-	-	31800	26500	21700	17400	13500	9990	6840
		P	-	-	15.2	13.8	12.4	11.1	9.85	8.65	7.52
	32	Q	-	-	34500	28800	23700	19100	15000	11300	8010
		P	-	-	14.4	13.2	11.9	10.7	9.61	8.52	7.48
	27	Q	-	-	36700	30700	25300	20500	16200	12400	8970
		P	-	-	13.8	12.6	11.5	10.4	9.38	8.37	7.42
	15	Q	-	-	41700	35100	29000	23700	19000	14900	11300
		P	-	-	12.2	11.3	10.4	9.56	8.73	7.93	7.16
SHG44e/665-4 SL	50	Q	-	-	26700	22000	-	-	-	-	-
		P	-	-	16.5	14.8	-	-	-	-	-
	46	Q	40000	34000	28600	23600	19100	15100	-	-	-
		P	19.3	17.6	16.1	14.5	13.0	11.6	-	-	-
	43	Q	41800	35600	29900	24800	20200	16000	12300	-	-
		P	18.8	17.2	15.7	14.2	12.8	11.4	10.1	-	-
	38	Q	44800	38200	32200	26700	21800	17400	13500	10100	6880
		P	18.0	16.5	15.1	13.8	12.4	11.1	9.95	8.76	7.64
	32	Q	48300	41200	34800	29000	23800	19100	15000	11300	8030
		P	17.0	15.7	14.4	13.2	12.0	10.8	9.70	8.62	7.59
	27	Q	51100	43700	37000	30900	25400	20500	16200	12400	8970
		P	16.1	14.9	13.7	12.6	11.5	10.5	9.46	8.47	7.52
	15	Q	57800	49500	42000	35200	29100	23700	19000	14800	11200
		P	13.9	13.0	12.1	11.2	10.4	9.61	8.80	8.01	7.26
SHG44e/770-4 L	50	Q	-	-	-	-	-	-	-	-	-
		P	-	-	-	-	-	-	-	-	-
	46	Q	-	-	32300	26900	21900	-	-	-	-
		P	-	-	18.6	16.7	14.9	-	-	-	-
	43	Q	-	-	33800	28200	23100	18500	14300	-	-
		P	-	-	18.3	16.4	14.7	13.0	11.4	-	-
	38	Q	-	-	36400	30400	25000	20100	15700	11700	-
		P	-	-	17.6	15.9	14.3	12.7	11.2	9.82	-
	32	Q	-	-	39400	33000	27200	22000	17300	13200	9390
		P	-	-	16.8	15.2	13.7	12.3	10.9	9.66	8.44
	27	Q	-	-	41800	35100	29000	23600	18700	14400	10500
		P	-	-	16.0	14.6	13.2	11.9	10.6	9.50	8.37
	15	Q	-	-	47500	40000	33200	27200	21800	17100	13000
		P	-	-	14.1	13.0	11.9	10.9	9.95	8.99	8.08

Relating to 20 °C suction gas temperature without liquid subcooling

Supplementary cooling and reduced suction gas temperature

Supplementary cooling or reduced suction gas temperature

vap.bock.de

SHG condensing units air-cooled single-stage
Performance data

R22 | 50 Hz

Type	Amb. temp. °C		Cooling capacity Q_o [W]								Power consumption P_e [kW]
			Evaporating temperature °C								
			5	0	-5	-10	-15	-20	-25	-30	-35
SHG44e/770-4 SL	50	Q	47000	39700	33100	27200	21900	-	-	-	-
		P	22.6	20.8	19.0	17.2	15.5	-	-	-	-
	46	Q	49500	41900	35000	28800	23300	18400	-	-	-
		P	21.9	20.2	18.5	16.8	15.2	13.6	-	-	-
	43	Q	51400	43600	36500	30100	24400	19400	14900	-	-
		P	21.4	19.8	18.1	16.5	14.9	13.4	11.9	-	-
	38	Q	54700	46400	38900	32200	26200	20900	16200	12100	8260
		P	20.4	18.9	17.5	16.0	14.5	13.1	11.7	10.3	9.06
	32	Q	58600	49800	41900	34800	28500	22900	17900	13500	9590
		P	19.2	17.9	16.6	15.3	13.9	12.6	11.4	10.1	9.00
	27	Q	61900	52700	44400	37000	30300	24500	19300	14800	10800
		P	18.1	16.9	15.8	14.6	13.4	12.2	11.1	10.0	8.92
	15	Q	69900	59800	50500	42300	34900	28400	22700	17800	-
		P	15.3	14.5	13.6	12.8	12.0	11.1	10.2	9.42	-
SHG56e/850-4 L	50	Q	-	-	-	-	-	-	-	-	-
		P	-	-	-	-	-	-	-	-	-
	46	Q	-	-	34700	29000	23800	-	-	-	-
		P	-	-	20.6	18.4	16.3	-	-	-	-
	43	Q	-	-	36400	30500	25100	20100	-	-	-
		P	-	-	20.2	18.1	16.1	14.2	-	-	-
	38	Q	-	-	39200	32900	27100	21900	17200	12800	-
		P	-	-	19.5	17.5	15.6	13.9	12.2	10.6	-
	32	Q	-	-	42400	35700	29500	24000	18900	14400	10300
		P	-	-	18.6	16.8	15.1	13.4	11.9	10.4	9.07
	27	Q	-	-	45100	38000	31500	25700	20400	15700	11500
		P	-	-	17.8	16.1	14.5	13.0	11.6	10.2	9.00
	15	Q	-	-	51400	43400	36100	29600	23900	18800	14300
		P	-	-	15.8	14.4	13.2	11.9	10.8	9.73	8.70
SHG56e/850-4 SL	50	Q	51000	43200	36100	29700	24000	-	-	-	-
		P	24.8	22.8	20.8	18.8	16.8	-	-	-	-
	46	Q	53800	45600	38200	31600	25600	20300	-	-	-
		P	24.1	22.2	20.3	18.4	16.5	14.7	-	-	-
	43	Q	55900	47400	39800	32900	26800	21300	16400	-	-
		P	23.5	21.7	19.9	18.1	16.3	14.6	12.9	-	-
	38	Q	59400	50500	42500	35300	28800	23000	17900	13300	9160
		P	22.5	20.8	19.1	17.5	15.8	14.2	12.7	11.2	9.80
	32	Q	63600	54200	45700	38100	31200	25100	19700	14900	10700
		P	21.2	19.7	18.2	16.7	15.2	13.8	12.4	11.0	9.74
	27	Q	67200	57400	48500	40400	33200	26900	21200	16300	11900
		P	20.1	18.7	17.3	16.0	14.7	13.3	12.1	10.8	9.65
	15	Q	76000	65100	55100	46200	38200	31200	25000	19600	14900
		P	17.1	16.1	15.1	14.1	13.1	12.1	11.1	10.2	9.28
SHG56e/995-4 L	50	Q	-	-	40400	33300	-	-	-	-	-
		P	-	-	24.0	21.6	-	-	-	-	-
	46	Q	-	-	42900	35500	28800	22700	-	-	-
		P	-	-	23.5	21.1	18.9	16.7	-	-	-
	43	Q	-	-	44800	37100	30200	23900	18400	-	-
		P	-	-	23.0	20.8	18.6	16.5	14.5	-	-
	38	Q	-	-	47900	39800	32500	26000	20100	4900	-
		P	-	-	22.2	20.1	18.1	16.2	14.3	12.5	-
	32	Q	-	-	51700	43100	35400	28500	22300	16800	11900
		P	-	-	21.1	19.2	17.4	15.7	14.0	12.3	10.8
	27	Q	-	-	55000	45900	37800	30600	24100	18400	13400
		P	-	-	20.2	18.4	16.8	15.2	13.6	12.1	10.7
	15	Q	-	-	62900	52800	43800	35700	28600	22400	17000
		P	-	-	17.6	16.3	15.0	13.8	12.6	11.4	10.3

Relating to 20 °C suction gas temperature without liquid subcooling

Supplementary cooling and reduced suction gas temperature

Supplementary cooling or reduced suction gas temperature

vap.bock.de

SHG condensing units air-cooled single-stage
Performance data

R22 | 50 Hz

Type	Amb. temp. °C		Cooling capacity Q_o [W] / Power consumption P_e [kW] — Evaporating temperature °C: 5	0	-5	-10	-15	-20	-25	-30	-35
SHG56e/995-4 SL	50	Q	-	48200	40300	33200	-	-	-	-	-
		P	-	26.8	24.3	21.8	-	-	-	-	-
	46	Q	60100	51000	42800	35300	28600	22600	-	-	-
		P	28.5	26.1	23.7	21.4	19.1	16.9	-	-	-
	43	Q	62500	53200	44600	36900	30000	23800	18200	-	-
		P	27.9	25.5	23.2	21.0	18.8	16.7	14.7	-	-
	38	Q	66600	56700	47800	39700	32400	25800	20000	14800	-
		P	26.8	24.6	22.4	20.3	18.3	16.4	14.5	12.7	-
	32	Q	71500	61100	51600	43000	35200	28300	22200	16700	11800
		P	25.3	23.3	21.3	19.5	17.6	15.8	14.1	12.4	10.9
	27	Q	75600	64700	54800	45700	37600	30400	24000	18300	13300
		P	24.0	22.2	20.4	18.7	17.0	15.3	13.7	12.2	10.8
	15	Q	85800	73700	62600	52500	43500	35500	28400	22200	16900
		P	20.6	19.2	17.8	16.5	15.2	13.9	12.7	11.5	10.4
SHG56e/1155-4 L	50	Q	-	-	47200	38900	-	-	-	-	-
		P	-	-	28.9	25.9	-	-	-	-	-
	46	Q	70000	59600	50000	41400	33600	26600	-	-	-
		P	34.0	31.1	28.2	25.4	22.7	20.0	-	-	-
	43	Q	72800	62000	52100	43200	35200	28000	21600	-	-
		P	33.2	30.4	27.6	25.0	22.3	19.8	17.4	-	-
	38	Q	77500	66100	55700	46300	37900	30400	23600	17600	-
		P	31.9	29.2	26.7	24.2	21.7	19.4	17.1	14.9	-
	32	Q	83100	71100	60100	50100	41200	33200	26100	19700	14100
		P	30.2	27.7	25.4	23.1	20.9	18.7	16.6	14.6	12.8
	27	Q	87900	75200	63700	53300	43900	35600	28100	21600	15700
		P	28.6	26.4	24.2	22.1	20.1	18.1	16.2	14.4	12.6
	15	Q	99500	85500	72700	61100	50700	41400	33200	26000	19800
		P	24.6	22.8	21.2	19.5	18.0	16.4	15.0	13.5	12.2
SHG56e/1155-4 SL	50	Q	-	-	45400	37600	-	-	-	-	-
		P	-	-	29.4	26.3	-	-	-	-	-
	46	Q	-	-	48200	40100	32700	-	-	-	-
		P	-	-	28.7	25.7	22.8	-	-	-	-
	43	Q	-	-	50300	41900	34200	27300	-	-	-
		P	-	-	28.2	25.3	22.5	19.8	-	-	-
	38	Q	-	-	53800	44900	36900	29600	23100	17200	-
		P	-	-	27.2	24.5	21.9	19.4	17.0	14.8	-
	32	Q	-	-	58100	48600	40100	32400	25500	19400	13800
		P	-	-	26.0	23.5	21.1	18.8	16.6	14.5	12.6
	27	Q	-	-	61700	51800	42800	34800	27600	21200	15500
		P	-	-	24.8	22.5	20.3	18.2	16.2	14.3	12.5
	15	Q	-	-	70500	59400	49500	40500	32600	25600	19500
		P	-	-	21.8	20.0	18.2	16.6	15.0	13.4	12.0
SHG66e/1340-4 L	50	Q	-	-	-	-	-	-	-	-	-
		P	-	-	-	-	-	-	-	-	-
	46	Q	-	-	54300	45800	37800	-	-	-	-
		P	-	-	31.7	28.0	24.6	-	-	-	-
	43	Q	-	-	56900	48000	39700	32100	-	-	-
		P	-	-	31.3	27.7	24.4	21.3	-	-	-
	38	Q	-	-	61300	51700	42800	34700	27500	21000	-
		P	-	-	30.5	27.1	24.0	21.0	18.3	15.7	-
	32	Q	-	-	66500	56200	46700	38000	30100	23200	17200
		P	-	-	29.4	26.3	23.3	20.6	18.0	15.6	13.4
	27	Q	-	-	70900	60000	49900	40700	32400	25200	18800
		P	-	-	28.4	25.4	22.7	20.1	17.7	15.5	13.4
	15	Q	-	-	81400	69000	57600	47200	38000	29900	23000
		P	-	-	25.5	23.0	20.7	18.6	16.6	14.8	13.0

Relating to 20 °C suction gas temperature without liquid subcooling

Supplementary cooling and reduced suction gas temperature

Supplementary cooling or reduced suction gas temperature

vap.bock.de

SHG condensing units air-cooled single-stage
Performance data

R22 | 50 Hz

Type	Amb. temp. °C		Cooling capacity Q_o [W] / Power consumption P_e [kW] — Evaporating temperature °C: 5	0	-5	-10	-15	-20	-25	-30	-35
SHG66e/1340-4 SL	50	Q	-	-	53400	44700	-	-	-	-	-
		P	-	-	31.9	28.3	-	-	-	-	-
	46	Q	-	67000	57000	47700	39200	-	-	-	-
		P	-	35.0	31.3	27.9	24.6	-	-	-	-
	43	Q	81200	70100	59700	50000	41100	33100	-	-	-
		P	38.1	34.4	30.9	27.6	24.4	21.4	-	-	-
	38	Q	87100	75200	64100	53800	44300	35800	28100	21400	-
		P	36.9	33.4	30.1	26.9	23.9	21.1	18.4	15.9	-
	32	Q	94200	81400	69500	58400	48200	39100	30900	23700	17500
		P	35.3	32.1	28.9	26.0	23.2	20.6	18.1	15.8	13.6
	27	Q	101000	86600	74000	62200	51500	41800	33200	25700	19200
		P	33.9	30.8	27.9	25.1	22.6	20.1	17.8	15.6	13.6
	15	Q	115000	98900	84600	71400	59300	48400	38800	30500	23400
		P	29.9	27.3	24.8	22.6	20.5	18.5	16.7	14.9	13.3

Relating to 20 °C suction gas temperature without liquid subcooling

Supplementary cooling and reduced suction gas temperature

Supplementary cooling or reduced suction gas temperature

vap.bock.de

Operating limits

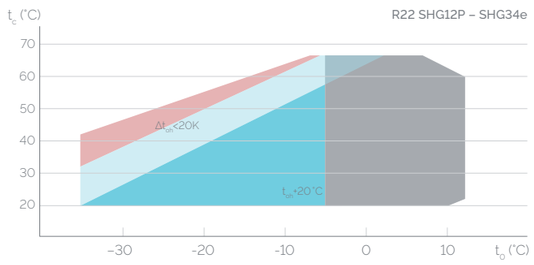

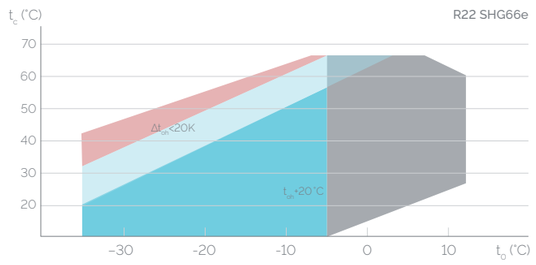

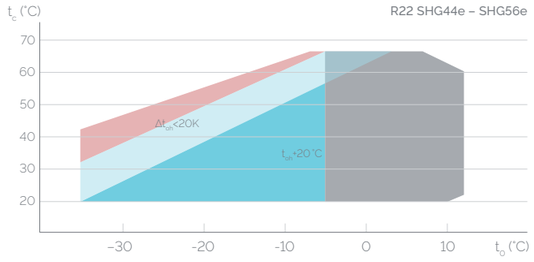

t_o Evaporating temperature (°C)
t_c Condensing temperature (°C)
Δt_{oh} Suction gas superheat (K)
t_{oh} Suction gas temperature (°C)

- Unlimited application range
- Supplementary cooling or reduced suction gas temperature (Δt_{oh}<20K)
- Supplementary cooling or reduced suction gas temperature (Δt_{oh}<20K)
- Supplementary cooling and reduced suction gas temperature (Δt_{oh}<20K)
- Motor version -S- (more powerful motor)

Max. permissible operating pressure (LP/HP) [1]: 19/28 bar
[1] LP = low pressure, HP = high pressure

SHG condensing units air-cooled single-stage
Technical data

SHG

Type	Compressor ①				Fan / Condenser			Receiver
	Displacement 50 Hz (1450 rpm)	Voltage ②	Max. Working current		Max. Working current 50 Hz	Max. Power consumption 50 Hz	Air flow 50 Hz	Capacity
	m³/h		A		A	W	m³/h	Ltr.
			Δ	Y				
SHG12P/60-4 SL	5.4	③	6.8	3.9	1 x 1.22	1 x 280	3550	6.0
SHG12P/75-4 L	6.7	③	7.1	4.1	1 x 1.22	1 x 280	3550	6.0
SHG12P/75-4 SL	6.7	③	8.0	4.6	1 x 1.22	1 x 280	3550	6.0
SHG12P/90-4 L	8.0	③	8.5	4.9	1 x 1.22	1 x 280	3550	6.0
SHG12P/90-4 SL	8.0	③	9.1	5.3	1 x 1.22	1 x 280	3550	6.0
SHG12P/110-4 L	9.4	③	9.2	5.3	1 x 1.22	1 x 280	3550	6.0
SHG12P/110-4 SL	9.4	③	10.6	6.1	1 x 1.22	1 x 280	3550	6.0
SHG22e/125-4 L	11.1	③	9.3	5.4	1 x 1.22	1 x 280	3550	6.0
SHG22e/125-4 SL	11.1	③	10.8	6.2	1 x 1.22	1 x 280	3410	6.0
SHG22e/160-4 L	13.7	③	11.1	6.4	1 x 1.22	1 x 280	3410	6.0
SHG22e/160-4 SL	13.7	③	13.1	7.6	1 x 1.22	1 x 280	3410	6.0
SHG22e/190-4 L	16.5	③	13.8	8.0	1 x 2.50	1 x 580	5950	8.0
SHG22e/190-4 SL	16.5	③	16.2	9.4	1 x 2.50	1 x 580	5950	8.0
SHG34e/215-4 L	18.8	③	14.0	8.1	1 x 2.50	1 x 580	5950	8.0
SHG34e/215-4 SL	18.8	③	18.3	10.5	1 x 2.50	1 x 580	5950	10.0
SHG34e/255-4 L	22.1	③	17.0	9.8	1 x 2.50	1 x 580	5950	8.0
SHG34e/255-4 SL	22.1	③	21.1	12.2	1 x 2.50	1 x 580	5950	10.0
SHG34e/315-4 L	27.3	③	21.1	12.2	1 x 2.50	1 x 580	5950	8.0
SHG34e/315-4 SL	27.3	③	25.5	14.7	2 x 2.50	2 x 500	8740	14.0
SHG34e/380-4 L	33.1	③	26.1	15.1	2 x 2.50	2 x 500	8740	14.0
SHG34e/380-4 SL	33.1	③	31.2	18.0	2 x 2.50	2 x 500	9490	14.0
	PW 1+2*							
SHG44e/475-4 L	41.3	④	19.0		2 x 2.50	2 x 500	9490	14.0
SHG44e/475-4 SL	41.3	④	23.0		4 x 2.50	4 x 500	16280	14.0
SHG44e/565-4 L	49.2	④	22.0		2 x 2.50	2 x 500	9490	14.0
SHG44e/565-4 SL	49.2	④	26.0		4 x 2.50	4 x 500	14880	23.0
SHG44e/665-4 L	57.7	④	26.0		4 x 2.50	4 x 500	16280	23.0
SHG44e/665-4 SL	57.7	④	30.0		4 x 2.50	4 x 500	14880	23.0
SHG44e/770-4 L	67.0	④	30.0		4 x 2.50	4 x 500	14880	23.0
SHG44e/770-4 SL	67.0	④	35.0		4 x 3.00	4 x 680	23850	35.0
SHG56e/850-4 L	73.8	④	32.6		4 x 2.50	4 x 500	14880	23.0
SHG56e/850-4 SL	73.8	④	39.4		4 x 3.00	4 x 680	23850	35.0
SHG56e/995-4 L	86.6	④	38.9		4 x 3.00	4 x 680	23850	23.0
SHG56e/995-4 SL	86.6	④	46.4		4 x 3.00	4 x 680	23850	35.0
SHG56e/1155-4 L	100.4	④	46.9		4 x 3.00	4 x 680	23850	23.0
SHG56e/1155-4 SL	100.4	④	58.3		4 x 3.00	4 x 680	21210	35.0
SHG66e/1340-4 L	116.5	④	55.0		4 x 3.00	4 x 680	23850	23.0
SHG66e/1340-4 SL	116.5	④	68.0		4 x 3.00	4 x 680	21210	35.0

*PW = Part Winding, motors for part winding start 1 = first part winding 2 = second part winding

SHG condensing units air-cooled single-stage
Technical data

Explanations

① Further explanations and technical data see brochure "semi-hermetic Bock compressors"

② Tolerance (± 10%) relates to the mean value of the voltage range. Other voltages and current types on request.

③ 220-240 V Δ / 380-420 V Y - 3 - 50 Hz

④ 380-420 V Y/YY - 3 - 50 Hz PW
PW = Part Winding, motors for part winding start (no start unloaders required)
- Designs for Y/Δ on request

SHG condensing units air-cooled single-stage
Dimensions and connections

SHG12P L » SHG12P/60-4 SL » SHG12P/75-4 L » SHG12P/75-4 SL » SHG12P/90-4 L SHG12P/90-4 SL » SHG12P/110-4 L » SHG12P/110-4 SL

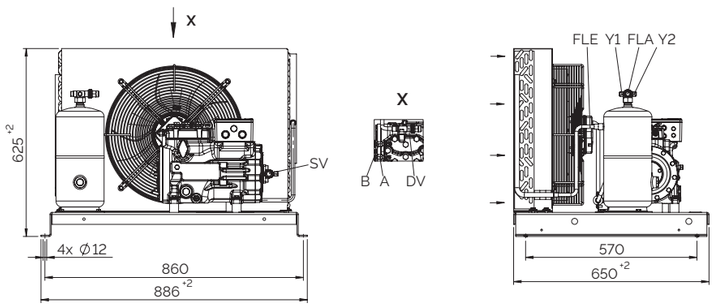

SHG22e L » SHG22e/125-4 L » SHG22e/125-4 SL » SHG22e/160-4 L » SHG22e/160-4 SL

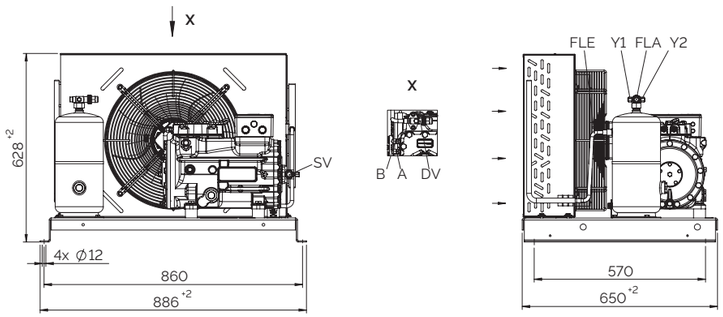

SHG22e L » SHG22e/190-4 L » SHG22e/190-4 SL

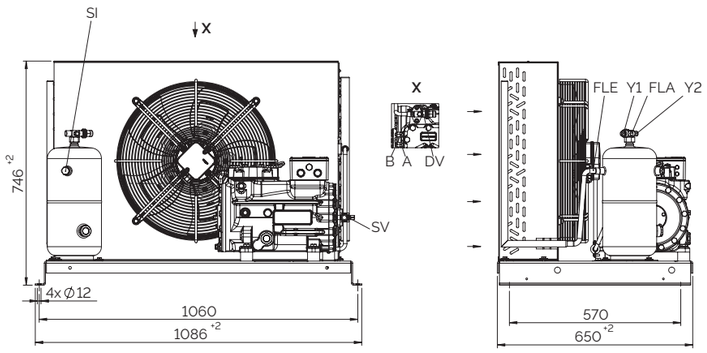

Dimensions in mm

Further compressor connections can be found in the brochure "semi-hermetic Bock compressors"

SHG condensing units air-cooled single-stage
Dimensions and connections

SHG34e L » SHG34e/215-4 SL » SHG34e/255-4 SL

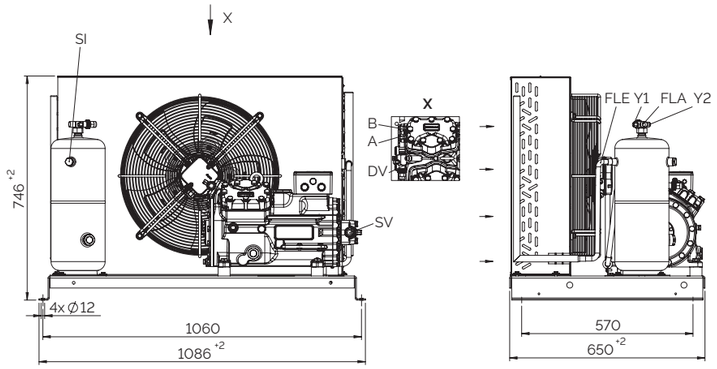

SHG34e L » SHG34e/315-4 SL » SHG34e/380-4 L » SHG34e/380-4 SL

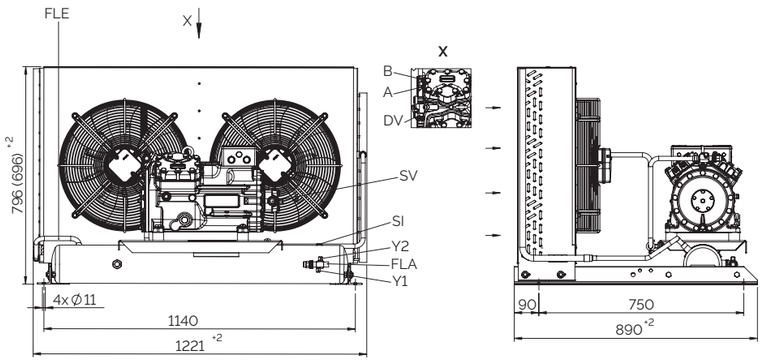

SHG44e L » SHG44e/475-4 L » SHG44e/565-4 L

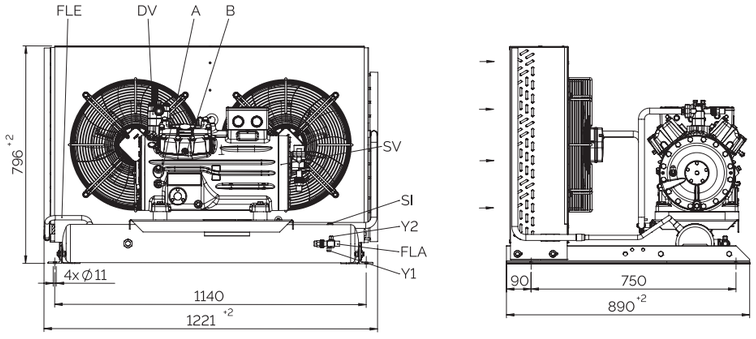

Dimensions in mm

Further compressor connections can be found in the brochure "semi-hermetic Bock compressors"

SHG condensing units air-cooled single-stage
Dimensions and connections

SHG44e L » SHG44e/665-4 L » SHG44e/770-4 L » SHG44e/475-4 SL » SHG44e/565-4 SL SHG44e/665-4 SL » SHG44e/770-4 SL

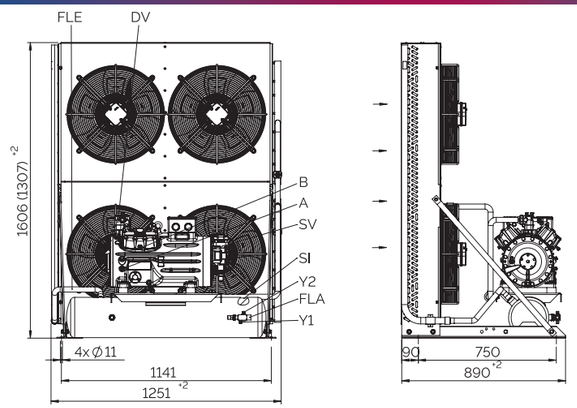

SHG56e L » SHG56e/850-4 L » SHG56e/995-4 SL » SHG56e/1155-4 L » SHG56e/850-4 SL SHG56e/995-4 SL » SHG56e/1155-4 SL

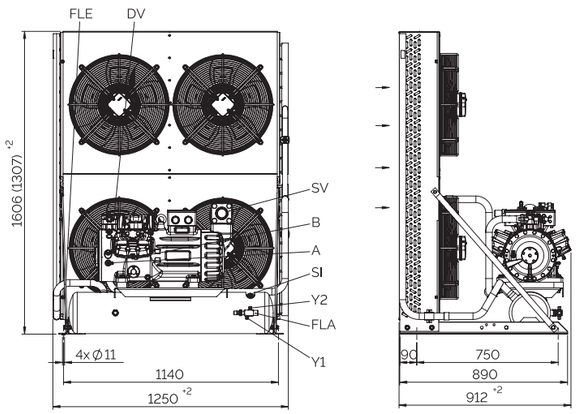

SHG66e L » SHG66e/1340-4 L » SHG66e/1340-4 SL

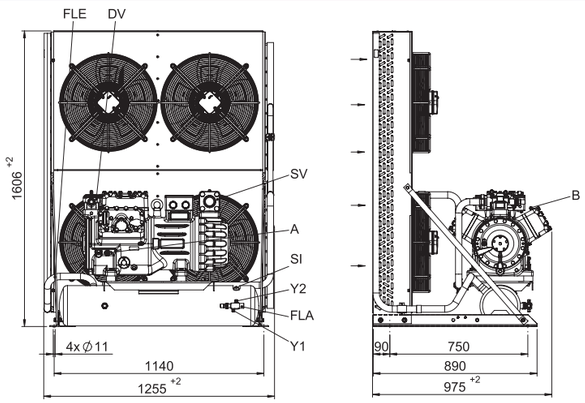

Dimensions in mm

Further compressor connections can be found in the brochure "semi-hermetic Bock compressors"

SHG condensing units air-cooled single-stage
Connections

SHG

	Connections ①						
	SV		FLA		SI	Y1	Y2
Type	mm	Inch	mm	Inch	Inch	Inch	Inch
SHG12P/60-4 L	16	5/8	12	1/2	-	7/16 UNF	7/16 UNF
SHG12P/75-4 L	16	5/8	12	1/2	-	7/16 UNF	7/16 UNF
SHG12P/75-4 SL	16	5/8	12	1/2	-	7/16 UNF	7/16 UNF
SHG12P/90-4 L	16	5/8	12	1/2	-	7/16 UNF	7/16 UNF
SHG12P/90-4 SL	16	5/8	12	1/2	-	7/16 UNF	7/16 UNF
SHG12P/110-4 L	16	5/8	12	1/2	-	7/16 UNF	7/16 UNF
SHG12P/110-4 SL	16	5/8	12	1/2	-	7/16 UNF	7/16 UNF
SHG22e/125-4 L	22	7/8	12	1/2	-	7/16 UNF	7/16 UNF
SHG22e/125-4 SL	22	7/8	12	1/2	-	7/16 UNF	7/16 UNF
SHG22e/160-4 L	22	7/8	12	1/2	-	7/16 UNF	7/16 UNF
SHG22e/160-4 SL	22	7/8	12	1/2	-	7/16 UNF	7/16 UNF
SHG22e/190-4 L	22	7/8	16	5/8	1/2 NPTF	7/16 UNF	7/16 UNF
SHG22e/190-4 SL	22	7/8	16	5/8	1/2 NPTF	7/16 UNF	7/16 UNF
SHG34e/215-4 L	28	1 1/8	16	5/8	1/2 NPTF	7/16 UNF	7/16 UNF
SHG34e/215-4 SL	28	1 1/8	16	5/8	1/2 NPTF	7/16 UNF	7/16 UNF
SHG34e/255-4 L	28	1 1/8	16	5/8	1/2 NPTF	7/16 UNF	7/16 UNF
SHG34e/255-4 SL	28	1 1/8	16	5/8	1/2 NPTF	7/16 UNF	7/16 UNF
SHG34e/315-4 L	28	1 1/8	16	5/8	1/2 NPTF	7/16 UNF	7/16 UNF
SHG34e/315-4 SL	28	1 1/8	16	5/8	1/2 NPTF	7/16 UNF	7/16 UNF
SHG34e/380-4 L	28	1 1/8	16	5/8	1/2 NPTF	7/16 UNF	7/16 UNF
SHG34e/380-4 SL	28	1 1/8	16	5/8	1/2 NPTF	7/16 UNF	7/16 UNF
SHG44e/475-4 L	35	1 3/8	16	5/8	1/2 NPTF	7/16 UNF	7/16 UNF
SHG44e/565-4 L	35	1 3/8	16	5/8	1/2 NPTF	7/16 UNF	7/16 UNF
SHG44e/665-4 L	42	1 5/8	22	7/8	1/2 NPTF	7/16 UNF	7/16 UNF
SHG44e/770-4 L	42	1 5/8	22	7/8	1/2 NPTF	7/16 UNF	7/16 UNF
SHG44e/475-4 SL	35	1 3/8	16	5/8	1/2 NPTF	7/16 UNF	7/16 UNF
SHG44e/565-4 SL	42	1 5/8	22	7/8	1/2 NPTF	7/16 UNF	7/16 UNF
SHG44e/665-4 SL	42	1 5/8	22	7/8	1/2 NPTF	7/16 UNF	7/16 UNF
SHG44e/770-4 SL	42	1 5/8	22	7/8	1/2 NPTF	7/16 UNF	7/16 UNF
SHG56e/850-4 L	54	2 1/8	22	7/8	1/2 NPTF	7/16 UNF	7/16 UNF
SHG56e/995-4 L	54	2 1/8	22	7/8	1/2 NPTF	7/16 UNF	7/16 UNF
SHG56e/1155-4 L	54	2 1/8	22	7/8	1/2 NPTF	7/16 UNF	7/16 UNF
SHG56e/850-4 SL	54	2 1/8	22	7/8	1/2 NPTF	7/16 UNF	7/16 UNF
SHG56e/995-4 SL	54	2 1/8	22	7/8	1/2 NPTF	7/16 UNF	7/16 UNF
SHG56e/1155-4 SL	54	2 1/8	22	7/8	1/2 NPTF	7/16 UNF	7/16 UNF
SHG66e/1340-4 L	54	2 1/8	22	7/8	1/2 NPTF	7/16 UNF	7/16 UNF
SHG66e/1340-4 SL	54	2 1/8	22	7/8	1/2 NPTF	7/16 UNF	7/16 UNF

SV - Suction line shut off valve
FLA - Liquid outlet
SI - Connection safety valve
Y1 - Connection liquid side, lockable
Y2 - Connection liquid side, not lockable

① Further compressor connections can be found in the brochure "semi-hermetic Bock compressors"

SHG condensing units air-cooled single-stage
Scope of supply and accessories

SHG

	SHG12	SHG22	SHG34	SHG44	SHG56	SHG66
Semi-hermetic reciprocating compressor with drive motor for part winding start 380-420 V Y/YY - 3 - 50 Hz, 440-480 V Y/YY - 3 - 60 Hz single-piece compressor housing with integrated electric motor, mounted on the liquid receiver using anti-vibration rubber pads	see HH catalog					
Generously sized liquid receiver with sight glass and Rotalock shut-off valve with brazing connection	●	●	●	●	●	●
Condenser with copper tubes and aluminum fins, optimized circuit, improved heat transfer and increased fin surface area.	●	●	●	●	●	●
Low noise fan 230 V -1- 50/60 Hz, with bimetal winding protection, speed control possible	●	●	●	●	●	●
Piping on discharge and liquid side	●	●	●	●	●	●
Inert gas charge	●	●	●	●	●	●
Rubber plates for installation of the unit	●	●	●	●	●	●
High pressure safety limiter + controller / + low pressure controller	○	○	○	○		
High-pressure limiter/high-pressure safety cut-out					○	○
Low-pressure limiter					○	○
Safety valve for receiver from 8l volume		○	○	○	○	○
Oil separator	○	○	○	○	○	○
Speed control available for all units with one fan	○	○	○			
Three-phase fan	○	○	○	○	○	○
Larger liquid receiver	○	○	○	○	○	○
Oil pressure safety switch MP 55 (adjustable)	○	○	○			
Oil pressure safety switch MP 54 (fixed)				○	○	○
Oil differential pressure sensor DELTA-P II				○	○	○
Weatherproof housing - easy assembly on site, thanks to assembly-friendly connection technology - also suitable for noise-reduced operation - eavailable for all units with one fan	○	○	○			

Further accessories can be found in the brochure "semi-hermetic Bock compressors" or in our compressor selection tool VAP: vap.bock.de as well as in our price list.

● Scope of supply (standard)
○ Available accessories

BOCK service and support

°Clever+Cool Experts live

BOCKshop

BOCK CO_2Tool

BOCK VAP

From experts for experts – our new online formats can be used from any computer, regardless of location: Office, workshop or even at home.

To ensure that you can make the best possible use of the advantages of BOCK compressors, we support you online and personal with four service and support modules. There you will find valuable information: from plant planning and design to implementation and operation to retrofitting or upgrading existing systems.

BOCK training courses
Together with Danfoss, BOCK offers special (online) user training courses. For this purpose, a complete transcritical supermarket refrigeration system with the latest CO_2 technology is in operation at the BOCK training center – with heat recovery + air conditioning + parallel compression + ejector – in order to make the seminars more practical.

BOCKshop
The online catalog in the **BOCK**shop is the best choice to find spare parts for your BOCK compressor easily and quickly around the clock. Including all Ex-drawings and parts lists also for printing.
» bockshop.bock.de

BOCKCO_2Tool
The strengths of the **BOCK**CO_2Tool based on Excel: Support for the selection of CO_2 compressors, e.g. by displaying the system schematic as RI flow diagram and refrigeration circuit in log-p-h-diagram, as well as selecting compressors in rack systems and for special CO_2 systems such as booster systems.
» Usage on request: vap@bock.de

BOCKVAP
The BOCK compressor selection program (VAP) is the perfect tool, to find suitable compressors or condensing units for your stationary or mobile application: Simply enter cooling capacity and operating conditions and the suitable components will be displayed immediately. In addition, the tool provides you with further information, e.g. application limits, performance data, dimensions and connections, scope of delivery, accessories, 3 D compressor models and much more.

Another advantage: **BOCK**VAP is available to you free of charge as an online and offline version for PC installation.
» vap.bock.de

SHA
Condensing units air-cooled single-stage

71 At a glance
72–83 Performance data
84 Technical data
85–87 Dimensions and connections
87 Scope of supply and accessories

SHA-L Condensing units air-cooled

Low-temperature applications generally place higher demands on any compressor. Here, the refrigerant mass flow is lower and gets disproportionately heated by the drive motor.

Efficiency

Reliability

This has the following effects on compressor behavior:

- As specific density decreases, volumetric efficiency decreases
- Discharge gas temperature and oil temperature increases. The oil ages more quickly and the lubricating properties deteriorate

The "HA principle" of air-cooled compressors, specially developed by BOCK, is the most efficient semi-hermetic solution for low-temperature applications. It employs a direct-suction compressor combined with an air-cooled drive motor. The suction gas is not heated additionally, but rather fed directly into the cylinders without diversions via the motor. A compact ventilation unit is integrated to cool the motor and provide air flow for the cylinder heads, partially cooling them as well. This solution reduces the discharge temperature, increasing capacity and extending the range of applications. In combination with our generously dimensioned condenser- fan unit, you will get an optimal and reliable solution for your frozen goods.

SHA condensing units air-cooled single-stage
At a glance

The current range

3 model sizes with 10 capacity stages from 11.1 to 57.7 m³/h (50 Hz)

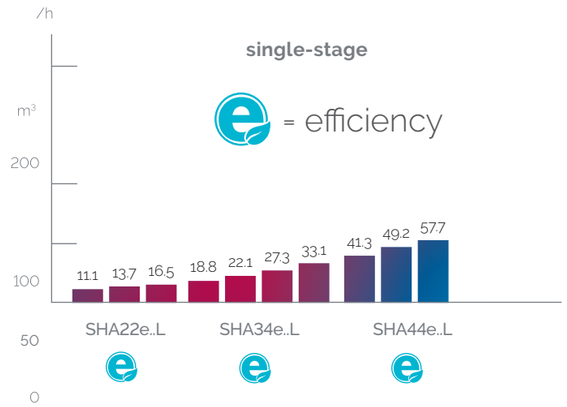

Type key – condensing units air-cooled

SHAX34e/315-4SL

- Air-cooled condensing unit
- Motor variant [4]
- Number of poles
- Swept volume
- e-series [3]
- Number of cylinders
- Size
- Ester oil filling [2]
- Series [1]

[1] SHG = Hermetic Gas-cooled (suction gas-cooled)
[2] X = Ester oil filling (HFC refrigerants e.g. R134a, R404A, R507, R407C)
[3] = Additional declaration for e-series and P = Pluscom compressors
[4] S = More powerful motor e.g. air-conditioning applications

SHA condensing units air-cooled single-stage
Performance data

R404A | 50 Hz

Type	Amb. temp. °C		Cooling capacity Q_o [W] Evaporating temperature °C -20	-25	-30	-35	-40	Power consumption P_e [kW]
SHA22e/125-4 L	50	Q	2670	2160	1710	1300	935	
		P	2.56	2.22	1.90	1.61	1.33	
	46	Q	2920	2380	1890	1450	1070	
		P	2.51	2.19	1.89	1.61	1.35	
	43	Q	3110	2540	2030	1560	1160	
		P	2.48	2.17	1.88	1.62	1.36	
	38	Q	3440	2820	2260	1760	1320	
		P	2.43	2.13	1.87	1.62	1.38	
	32	Q	3840	3160	2540	1990	1510	
		P	2.36	2.09	1.84	1.61	1.39	
	27	Q	4200	3460	2790	2190	1680	
		P	2.29	2.03	1.80	1.58	1.38	
	15	Q	5110	4240	3440	-	-	
		P	2.05	1.81	1.60	-	-	
SHA22e/160-4 L	50	Q	-	-	1990	1510	1090	
		P	-	-	2.30	1.93	1.57	
	46	Q	3510	2870	2280	1760	1290	
		P	3.06	2.66	2.28	1.93	1.60	
	43	Q	3810	3120	2490	1920	1430	
		P	3.01	2.62	2.27	1.94	1.62	
	38	Q	4270	3500	2800	2180	1640	
		P	2.93	2.58	2.25	1.94	1.65	
	32	Q	4780	3920	3150	2460	1870	
		P	2.85	2.52	2.21	1.93	1.66	
	27	Q	5170	4250	3410	2680	2040	
		P	2.77	2.46	2.17	1.90	1.65	
	15	Q	6030	4960	4000	3150	2420	
		P	2.56	2.28	2.01	1.77	1.55	
SHA22e/190-4 L	50	Q	3940	3180	2490	1880	1350	
		P	4.04	3.53	3.06	2.61	2.19	
	46	Q	4430	3590	2840	2170	1590	
		P	3.95	3.48	3.03	2.62	2.22	
	43	Q	4780	3890	3080	2370	1750	
		P	3.89	3.44	3.02	2.62	2.25	
	38	Q	5350	4360	3470	2690	2020	
		P	3.80	3.38	2.99	2.63	2.28	
	32	Q	6000	4900	3920	3050	2310	
		P	3.68	3.30	2.94	2.61	2.29	
	27	Q	6530	5340	4280	3350	2550	
		P	3.57	3.21	2.87	2.56	2.27	
	15	Q	7750	6370	5130	4040	-	
		P	3.23	2.90	2.60	2.32	-	
SHA34e/215-4 L	50	Q	-	3540	2780	2110	1510	
		P	-	3.96	3.41	2.89	2.41	
	46	Q	4930	4010	3180	2430	1780	
		P	4.44	3.89	3.38	2.90	2.45	
	43	Q	5330	4350	3460	2660	1980	
		P	4.37	3.85	3.36	2.91	2.48	
	38	Q	5970	4880	3900	3030	2270	
		P	4.26	3.78	3.33	2.91	2.51	
	32	Q	6710	5500	4410	3440	2610	
		P	4.14	3.69	3.28	2.89	2.53	
	27	Q	7300	5990	4810	3770	2870	
		P	4.02	3.59	3.21	2.85	2.51	
	15	Q	8690	7150	5770	4550	3500	
		P	3.65	3.26	2.91	2.59	2.29	

Relating to 20 °C suction gas temperature without liquid subcooling

Supplementary cooling or reduced suction gas temperature

vap.bock.de

SHA condensing units air-cooled single-stage
Performance data

R404A | 50 Hz

Type	Amb. temp. °C		Cooling capacity Q_o [W] Evaporating temperature °C -20	-25	-30	-35	-40	Power consumption P_e [kW]
SHA34e/255-4 L	50	Q	-	-	3190	2420	1740	
		P	-	-	3.91	3.30	2.72	
	46	Q	5620	4590	3650	2800	2060	
		P	5.15	4.49	3.88	3.31	2.77	
	43	Q	6090	4980	3970	3070	2280	
		P	5.07	4.44	3.86	3.31	2.80	
	38	Q	6830	5610	4490	3500	2630	
		P	4.94	4.36	3.82	3.32	2.85	
	32	Q	7690	6320	5080	3980	3020	
		P	4.80	4.26	3.76	3.30	2.87	
	27	Q	8380	6900	5560	4370	3340	
		P	4.67	4.16	3.69	3.26	2.85	
	15	Q	9980	8240	6670	5270	4070	
		P	4.26	3.79	3.37	2.98	2.62	
SHA34e/315-4 L	50	Q	-	-	-	2880	2080	
		P	-	-	-	3.94	3.22	
	46	Q	6600	5430	4340	3350	2470	
		P	6.29	5.44	4.66	3.95	3.27	
	43	Q	7170	5910	4740	3680	2750	
		P	6.18	5.37	4.63	3.95	3.32	
	38	Q	8080	6670	5370	4200	3180	
		P	6.03	5.28	4.59	3.96	3.38	
	32	Q	9120	7540	6090	4790	3660	
		P	5.85	5.16	4.53	3.95	3.41	
	27	Q	9960	8240	6670	5260	4040	
		P	5.70	5.05	4.45	3.90	3.40	
	15	Q	11900	9860	8020	6360	4930	
		P	5.25	4.65	4.10	3.60	3.14	
SHA34e/380-4 L	50	Q	-	6130	4860	3710	2690	
		P	-	6.39	5.46	4.56	3.70	
	46	Q	8340	6830	5450	4210	3110	
		P	7.31	6.41	5.53	4.67	3.86	
	43	Q	8960	7350	5890	4570	3410	
		P	7.27	6.40	5.55	4.73	3.95	
	38	Q	9970	8210	6600	5150	3890	
		P	7.17	6.36	5.57	4.80	4.07	
	32	Q	11200	9210	7430	5840	4450	
		P	7.01	6.26	5.53	4.83	4.16	
	27	Q	12200	10100	8120	6400	4910	
		P	6.85	6.15	5.46	4.81	4.18	
	15	Q	14600	12100	9800	7780	6020	
		P	6.37	5.77	5.19	4.63	4.11	
SHA44e/475-4 L	50	Q	-	-	6640	5130	3790	
		P	-	-	6.21	5.15	4.14	
	46	Q	11200	9150	7320	5680	4220	
		P	8.48	7.37	6.31	5.30	4.34	
	43	Q	12000	9780	7840	6100	4560	
		P	8.45	7.39	6.37	5.39	4.47	
	38	Q	13200	10900	8710	6810	5130	
		P	8.37	7.38	6.42	5.51	4.64	
	32	Q	14800	12200	9780	7690	5850	
		P	8.22	7.31	6.43	5.60	4.80	
	27	Q	16000	13200	10700	8440	6460	
		P	8.05	7.21	6.40	5.62	4.88	
	15	Q	19100	15800	12900	10300	7960	
		P	7.53	6.85	6.19	5.55	4.94	

Relating to 20 °C suction gas temperature without liquid subcooling

Supplementary cooling or reduced suction gas temperature

vap.bock.de

SHA condensing units air-cooled single-stage
Performance data

R404A | 50 Hz

Type	Amb. temp. °C		Cooling capacity Q_o [W] / Power consumption P_e [kW] — Evaporating temperature °C: -20	-25	-30	-35	-40
SHA44e/565-4 L	50	Q	-	-	7550	5880	4380
		P	-	-	7.69	6.44	5.25
	46	Q	12600	10400	8350	6520	4890
		P	10.3	9.01	7.77	6.57	5.44
	43	Q	13500	11100	8950	7010	5280
		P	10.2	9.01	7.80	6.65	5.55
	38	Q	14900	12400	9960	7840	5950
		P	10.1	8.96	7.83	6.74	5.71
	32	Q	16600	13800	11200	8860	6780
		P	9.95	8.85	7.80	6.79	5.83
	27	Q	18100	15100	12300	9710	7480
		P	9.74	8.71	7.73	6.78	5.88
	15	Q	21600	18000	14800	11800	9210
		P	9.12	8.25	7.42	6.62	5.86
SHA44e/665-4 L	50	Q	-	11500	9160	7090	5260
		P	-	11.3	9.74	8.27	6.87
	46	Q	15400	12700	10100	7860	5870
		P	12.8	11.2	9.80	8.39	7.05
	43	Q	16500	13500	10900	8440	6330
		P	12.7	11.2	9.81	8.46	7.17
	38	Q	18200	15000	12100	9430	7130
		P	12.5	11.1	9.79	8.52	7.32
	32	Q	20300	16700	13500	10700	8120
		P	12.2	10.9	9.71	8.54	7.43
	27	Q	22000	18200	14800	11700	8970
		P	11.8	10.7	9.59	8.50	7.47
	15	Q	26200	21800	17800	14200	11100
		P	11.0	10.0	9.13	8.25	7.40

Relating to 20 °C suction gas temperature without liquid subcooling

Supplementary cooling or reduced suction gas temperature

vap.bock.de

Operating limits

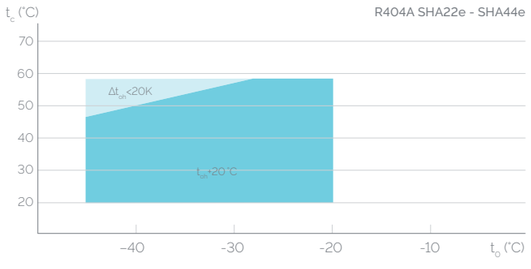

t_o Evaporating temperature (°C)
t_c Condensing temperature (°C)
Δt_{oh} Suction gas superheat (K)
t_{oh} Suction gas temperature (°C)

Unlimited application range
Supplementary cooling or reduced suction gas temperature (Δt_{oh}<20K)

Max. permissible operating pressure (LP/HP) [1]: 19/28 bar
[1] LP = low pressure, HP = high pressure

SHA condensing units air-cooled single-stage
Performance data

R448A | 50 Hz

Type	Amb. temp. °C		Cooling capacity Q_o [W] / Power consumption P_e [kW] — Evaporating temperature °C: -20	-25	-30	-35	-40
SHA22e/125-4 L	50	Q	2450	1880	1370	934	557
		P	2.15	1.87	1.60	1.34	1.11
	46	Q	2640	2040	1510	1050	650
		P	2.14	1.87	1.61	1.36	1.14
	43	Q	2800	2170	1620	1140	722
		P	2.13	1.87	1.62	1.38	1.16
	38	Q	3060	2390	1800	1290	849
		P	2.11	1.86	1.62	1.40	1.19
	32	Q	3380	2660	2030	1480	1010
		P	2.08	1.85	1.63	1.42	1.22
	27	Q	3650	2890	2220	1650	1150
		P	2.04	1.82	1.62	1.43	1.24
	15	Q	4340	3480	2720	2070	1510
		P	1.92	1.75	1.58	1.42	1.27
SHA22e/160-4 L	50	Q	3070	2320	1670	1100	605
		P	2.52	2.17	1.83	1.51	1.21
	46	Q	3310	2530	1840	1240	727
		P	2.52	2.18	1.85	1.55	1.26
	43	Q	3500	2690	1980	1360	822
		P	2.51	2.18	1.86	1.57	1.29
	38	Q	3820	2960	2210	1550	987
		P	2.48	2.17	1.88	1.60	1.34
	32	Q	4220	3300	2490	1790	1200
		P	2.44	2.16	1.89	1.63	1.38
	27	Q	4560	3590	2740	2000	1380
		P	2.40	2.13	1.88	1.64	1.41
	15	Q	5410	4320	3360	2530	1830
		P	2.25	2.04	1.83	1.64	1.45
SHA22e/190-4 L	50	Q	4040	3110	2300	1610	1030
		P	3.43	3.00	2.59	2.21	1.85
	46	Q	4350	3370	2520	1800	1180
		P	3.40	3.00	2.61	2.24	1.90
	43	Q	4580	3570	2690	1940	1300
		P	3.38	2.99	2.61	2.26	1.93
	38	Q	4970	3890	2960	2170	1500
		P	3.33	2.96	2.61	2.28	1.97
	32	Q	5440	4290	3300	2450	1740
		P	3.25	2.92	2.60	2.29	2.00
	27	Q	5840	4630	3580	2690	1940
		P	3.17	2.87	2.57	2.29	2.02
	15	Q	6790	5430	4260	3260	2430
		P	2.93	2.69	2.46	2.24	2.02
SHA34e/215-4 L	50	Q	3960	2930	2040	1270	610
		P	3.46	2.96	2.49	2.04	1.62
	46	Q	4330	3250	2310	1500	810
		P	3.46	2.99	2.54	2.11	1.71
	43	Q	4620	3490	2520	1680	964
		P	3.45	3.00	2.57	2.16	1.78
	38	Q	5090	3900	2860	1980	1230
		P	3.42	3.00	2.60	2.23	1.87
	32	Q	5670	4400	3290	2340	1550
		P	3.36	2.98	2.63	2.28	1.95
	27	Q	6160	4820	3650	2650	1810
		P	3.29	2.95	2.62	2.31	2.01
	15	Q	7340	5830	4520	3400	2460
		P	3.05	2.80	2.56	2.32	2.08

Relating to 20 °C suction gas temperature without liquid subcooling

Supplementary cooling or reduced suction gas temperature

vap.bock.de

SHA condensing units air-cooled single-stage
Performance data

R448A | 50 Hz

Type	Amb. temp. °C		Cooling capacity Q_o [W] Evaporating temperature °C -20	-25	-30	-35	-40	Power consumption P_e [kW]
SHA34e/255-4 L	50	Q	4880	3730	2710	1840	1090	
		P	4.17	3.57	3.00	2.47	1.98	
	46	Q	5290	4070	3000	2080	1290	
		P	4.15	3.57	3.03	2.52	2.05	
	43	Q	5600	4330	3220	2260	1440	
		P	4.13	3.57	3.05	2.56	2.10	
	38	Q	6140	4780	3600	2580	1710	
		P	4.08	3.56	3.06	2.60	2.17	
	32	Q	6790	5330	4060	2970	2040	
		P	3.99	3.52	3.07	2.64	2.24	
	27	Q	7340	5810	4460	3310	2330	
		P	3.91	3.47	3.05	2.66	2.29	
	15	Q	8720	6980	5460	4150	3050	
		P	3.63	3.29	2.96	2.64	2.34	
SHA34e/315-4 L	50	Q	5870	4430	3190	2130	1240	
		P	4.98	4.21	3.50	2.85	2.26	
	46	Q	6390	4870	3560	2430	1490	
		P	4.97	4.23	3.56	2.93	2.36	
	43	Q	6780	5210	3840	2670	1690	
		P	4.95	4.24	3.58	2.98	2.43	
	38	Q	7450	5780	4320	3070	2020	
		P	4.90	4.23	3.62	3.05	2.53	
	32	Q	8270	6480	4910	3570	2440	
		P	4.81	4.20	3.63	3.10	2.62	
	27	Q	8960	7060	5410	3990	2790	
		P	4.71	4.15	3.62	3.13	2.67	
	15	Q	10700	8510	6630	5030	3680	
		P	4.38	3.93	3.51	3.11	2.74	
SHA34e/380-4 L	50	Q	7340	5550	3990	2640	1470	
		P	6.50	5.57	4.70	3.88	3.12	
	46	Q	7980	6100	4460	3040	1820	
		P	6.47	5.58	4.75	3.96	3.24	
	43	Q	8460	6510	4810	3340	2080	
		P	6.44	5.58	4.77	4.02	3.31	
	38	Q	9260	7200	5400	3850	2520	
		P	6.36	5.55	4.79	4.08	3.42	
	32	Q	10300	8040	6120	4470	3060	
		P	6.22	5.48	4.78	4.12	3.50	
	27	Q	11100	8740	6720	4980	3510	
		P	6.08	5.39	4.74	4.12	3.55	
	15	Q	13100	10500	8170	6220	4590	
		P	5.62	5.06	4.53	4.02	3.55	
SHA44e/475-4 L	50	Q	9710	7370	5320	3550	2020	
		P	7.50	6.39	5.35	4.37	3.45	
	46	Q	10500	8030	5880	4020	2430	
		P	7.48	6.43	5.43	4.49	3.61	
	43	Q	11100	8530	6310	4380	2740	
		P	7.45	6.44	5.48	4.57	3.72	
	38	Q	12100	9370	7030	5000	3270	
		P	7.38	6.43	5.53	4.68	3.88	
	32	Q	13300	10500	7910	5750	3920	
		P	7.25	6.38	5.56	4.77	4.03	
	27	Q	14300	11300	8660	6400	4480	
		P	7.11	6.31	5.54	4.82	4.13	
	15	Q	16800	13500	10500	7970	5840	
		P	6.63	5.99	5.39	4.81	4.25	

Relating to 20 °C suction gas temperature without liquid subcooling

Supplementary cooling or reduced suction gas temperature

vap.bock.de

SHA condensing units air-cooled single-stage
Performance data

R448A | 50 Hz

Type	Amb. temp. °C		Cooling capacity Q_o [W] Evaporating temperature °C -20	-25	-30	-35	-40	Power consumption P_e [kW]
SHA44e/565-4 L	50	Q	12100	9310	6880	4770	2940	
		P	9.17	7.86	6.62	5.45	4.37	
	46	Q	13000	10100	7520	5310	3400	
		P	9.12	7.86	6.67	5.55	4.51	
	43	Q	13700	10700	8010	5720	3750	
		P	9.07	7.85	6.70	5.62	4.60	
	38	Q	14800	11600	8820	6410	4340	
		P	8.96	7.81	6.72	5.70	4.74	
	32	Q	16200	12800	9820	7260	5070	
		P	8.79	7.72	6.71	5.75	4.86	
	27	Q	17300	13800	10700	7990	5690	
		P	8.60	7.60	6.66	5.76	4.92	
	15	Q	20200	16200	12800	9760	7220	
		P	8.01	7.19	6.40	5.66	4.96	
SHA44e/665-4 L	50	Q	14200	11000	8100	5650	3540	
		P	11.4	9.88	8.41	7.03	5.76	
	46	Q	15300	11900	8850	6270	4060	
		P	11.3	9.85	8.45	7.13	5.91	
	43	Q	16100	12500	9410	6750	4460	
		P	11.2	9.82	8.46	7.19	6.01	
	38	Q	17400	13700	10400	7550	5140	
		P	11.0	9.73	8.46	7.27	6.15	
	32	Q	19000	15100	11600	8530	5980	
		P	10.8	9.58	8.41	7.31	6.27	
	27	Q	20400	16200	12600	9360	6690	
		P	10.5	9.41	8.33	7.31	6.34	
	15	Q	23800	19100	15000	11400	8450	
		P	9.75	8.85	7.99	7.16	6.37	

Relating to 20 °C suction gas temperature without liquid subcooling

Supplementary cooling or reduced suction gas temperature

vap.bock.de

Operating limits

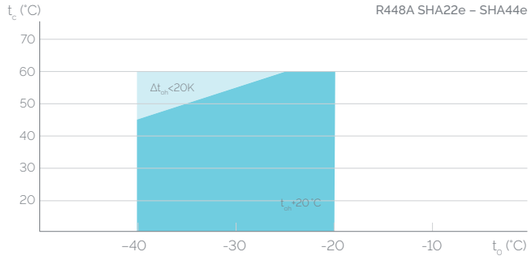

t_o Evaporating temperature (°C)
t_c Condensing temperature (°C)
Δt_{oh} Suction gas superheat (K)
t_{oh} Suction gas temperature (°C)

● Unlimited application range
○ Supplementary cooling or reduced suction gas temperature (Δt_{oh}<20K)

Max. permissible operating pressure (LP/HP) [1]: 19/28 bar
[1] LP = low pressure, HP = high pressure

SHA condensing units air-cooled single-stage
Performance data

R449A | 50 Hz

Type	Amb. temp. °C		Cooling capacity Q_o [W] / Power consumption P_e [kW] — Evaporating temperature °C -20	-25	-30	-35	-40
SHA22e/125-4 L	50	Q	2430	1870	1370	930	555
		P	2.15	1.86	1.59	1.34	1.10
	46	Q	2630	2030	1500	1050	647
		P	2.14	1.86	1.60	1.36	1.13
	43	Q	2780	2160	1610	1130	720
		P	2.13	1.86	1.61	1.38	1.15
	38	Q	3040	2380	1790	1280	846
		P	2.10	1.86	1.62	1.40	1.19
	32	Q	3360	2650	2020	1480	1010
		P	2.07	1.84	1.62	1.41	1.22
	27	Q	3640	2880	2220	1640	1150
		P	2.03	1.82	1.62	1.42	1.24
	15	Q	4330	3470	2720	2060	1510
		P	1.91	1.74	1.58	1.42	1.27
SHA22e/160-4 L	50	Q	3050	2310	1660	1090	602
		P	2.51	2.16	1.83	1.51	1.21
	46	Q	3290	2510	1830	1240	724
		P	2.51	2.17	1.85	1.54	1.26
	43	Q	3480	2670	1970	1350	819
		P	2.50	2.17	1.86	1.56	1.29
	38	Q	3810	2950	2200	1550	984
		P	2.47	2.17	1.87	1.60	1.33
	32	Q	4200	3290	2480	1790	1200
		P	2.43	2.15	1.88	1.62	1.38
	27	Q	4550	3580	2730	2000	1380
		P	2.39	2.13	1.88	1.64	1.41
	15	Q	5400	4310	3350	2530	1830
		P	2.24	2.03	1.83	1.63	1.45
SHA22e/190-4 L	50	Q	4020	3090	2290	1610	1020
		P	3.42	2.99	2.59	2.20	1.84
	46	Q	4330	3350	2510	1790	1180
		P	3.39	2.99	2.60	2.23	1.89
	43	Q	4560	3550	2670	1930	1290
		P	3.37	2.98	2.61	2.25	1.92
	38	Q	4950	3880	2950	2160	1490
		P	3.32	2.95	2.61	2.28	1.97
	32	Q	5420	4280	3290	2440	1730
		P	3.24	2.91	2.59	2.29	2.00
	27	Q	5820	4610	3570	2680	1940
		P	3.16	2.86	2.57	2.29	2.02
	15	Q	6770	5420	4250	3260	2430
		P	2.92	2.69	2.46	2.24	2.02
SHA34e/215-4 L	50	Q	3940	2910	2030	1260	607
		P	3.45	2.95	2.48	2.04	1.62
	46	Q	4310	3230	2300	1490	807
		P	3.45	2.98	2.53	2.11	1.71
	43	Q	4590	3470	2500	1670	960
		P	3.44	2.99	2.56	2.16	1.77
	38	Q	5070	3880	2850	1970	1220
		P	3.41	2.99	2.60	2.22	1.86
	32	Q	5650	4380	3280	2340	1540
		P	3.35	2.98	2.62	2.28	1.95
	27	Q	6130	4800	3640	2650	1810
		P	3.28	2.94	2.62	2.31	2.01
	15	Q	7320	5820	4510	3400	2460
		P	3.04	2.79	2.55	2.31	2.08

Relating to 20 °C suction gas temperature without liquid subcooling

Supplementary cooling or reduced suction gas temperature

vap.bock.de

SHA condensing units air-cooled single-stage
Performance data

R449A | 50 Hz

Type	Amb. temp. °C		Cooling capacity Q_o [W] / Power consumption P_e [kW] — Evaporating temperature °C -20	-25	-30	-35	-40
SHA34e/255-4 L	50	Q	4850	3700	2700	1830	1080
		P	4.16	3.56	2.99	2.46	1.97
	46	Q	5260	4050	2990	2070	1280
		P	4.14	3.56	3.02	2.52	2.05
	43	Q	5570	4310	3210	2250	1440
		P	4.11	3.56	3.04	2.55	2.10
	38	Q	6100	4760	3580	2570	1710
		P	4.06	3.54	3.06	2.60	2.17
	32	Q	6760	5310	4050	2960	2040
		P	3.98	3.51	3.06	2.64	2.24
	27	Q	7320	5790	4450	3300	2330
		P	3.90	3.46	3.05	2.65	2.28
	15	Q	8700	6960	5440	4140	3040
		P	3.62	3.28	2.95	2.64	2.33
SHA34e/315-4 L	50	Q	5830	4410	3170	2120	1240
		P	4.96	4.20	3.49	2.85	2.26
	46	Q	6350	4850	3540	2420	1490
		P	4.95	4.22	3.55	2.92	2.36
	43	Q	6750	5180	3820	2660	1680
		P	4.93	4.23	3.57	2.97	2.43
	38	Q	7420	5750	4300	3060	2010
		P	4.88	4.22	3.61	3.04	2.52
	32	Q	8230	6450	4890	3550	2430
		P	4.79	4.19	3.62	3.10	2.61
	27	Q	8920	7040	5390	3980	2790
		P	4.70	4.13	3.61	3.12	2.67
	15	Q	10700	8480	6620	5020	3680
		P	4.37	3.92	3.50	3.10	2.73
SHA34e/380-4 L	50	Q	7300	5520	3970	2620	1470
		P	6.47	5.55	4.68	3.87	3.11
	46	Q	7930	6070	4440	3020	1810
		P	6.45	5.56	4.73	3.95	3.23
	43	Q	8410	6480	4790	3330	2070
		P	6.41	5.56	4.76	4.01	3.31
	38	Q	9220	7170	5380	3830	2510
		P	6.34	5.53	4.78	4.07	3.41
	32	Q	10200	8010	6100	4450	3050
		P	6.20	5.46	4.77	4.11	3.50
	27	Q	11100	8710	6700	4970	3500
		P	6.06	5.37	4.73	4.12	3.54
	15	Q	13000	10500	8150	6220	4580
		P	5.60	5.04	4.52	4.02	3.54
SHA44e/475-4 L	50	Q	9650	7330	5290	3530	2010
		P	7.47	6.37	5.33	4.36	3.44
	46	Q	10500	7990	5850	4000	2420
		P	7.45	6.41	5.41	4.48	3.60
	43	Q	11000	8490	6280	4370	2730
		P	7.42	6.42	5.46	4.56	3.71
	38	Q	12000	9330	7000	4980	3260
		P	7.35	6.41	5.52	4.67	3.87
	32	Q	13200	10400	7880	5740	3910
		P	7.23	6.36	5.54	4.76	4.03
	27	Q	14300	11300	8630	6380	4470
		P	7.08	6.29	5.53	4.81	4.13
	15	Q	16800	13400	10500	7960	5830
		P	6.61	5.98	5.38	4.80	4.24

Relating to 20 °C suction gas temperature without liquid subcooling

Supplementary cooling or reduced suction gas temperature

vap.bock.de

SHA condensing units air-cooled single-stage
Performance data

R449A | 50 Hz

Type	Amb. temp. °C		Cooling capacity Q_o [W] / Power consumption P_e [kW] — Evaporating temperature °C: -20	-25	-30	-35	-40
SHA44e/565-4 L	50	Q	12000	9260	6850	4750	2930
		P	9.13	7.83	6.60	5.44	4.36
	46	Q	12900	10100	7480	5280	3380
		P	9.08	7.83	6.65	5.54	4.50
	43	Q	13600	10600	7970	5690	3730
		P	9.03	7.82	6.68	5.60	4.60
	38	Q	14700	11600	8790	6390	4330
		P	8.93	7.78	6.70	5.68	4.73
	32	Q	16100	12800	9790	7240	5060
		P	8.75	7.69	6.69	5.74	4.85
	27	Q	17300	13800	10700	7960	5680
		P	8.57	7.58	6.64	5.75	4.92
	15	Q	20100	16200	12800	9740	7220
		P	7.99	7.17	6.39	5.65	4.95
SHA44e/665-4 L	50	Q	14100	10900	8060	5630	3530
		P	11.4	9.85	8.38	7.02	5.75
	46	Q	15200	11800	8800	6250	4050
		P	11.3	9.82	8.43	7.12	5.90
	43	Q	16000	12500	9370	6720	4450
		P	11.2	9.79	8.44	7.18	6.00
	38	Q	17300	13600	10400	7520	5130
		P	11.0	9.70	8.44	7.25	6.14
	32	Q	19000	15000	11500	8500	5970
		P	10.7	9.55	8.39	7.29	6.26
	27	Q	20300	16200	12500	9340	6680
		P	10.5	9.39	8.31	7.29	6.33
	15	Q	23700	19000	14900	11400	8440
		P	9.73	8.83	7.97	7.15	6.36

Relating to 20 °C suction gas temperature without liquid subcooling

Supplementary cooling or reduced suction gas temperature

vap.bock.de

Operating limits

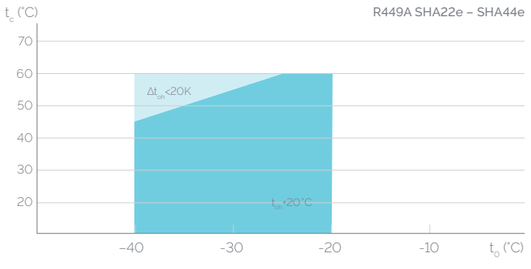

t_o Evaporating temperature (°C)
t_c Condensing temperature (°C)
Δt_{oh} Suction gas superheat (K)
t_{oh} Suction gas temperature (°C)

Unlimited application range
Supplementary cooling or reduced suction gas temperature (Δt_{oh}<20K)

Max. permissible operating pressure (LP/HP) [1]: 19/28 bar
[1] LP = low pressure, HP = high pressure

SHA condensing units air-cooled single-stage
Performance data

R22 | 50 Hz

Type	Amb. temp. °C		Cooling capacity Q_o [W] / Power consumption P_e [kW] — Evaporating temperature °C: -20	-25	-30	-35	-40
SHA22e/125-4 L	50	Q	2780	2170	1630	1170	760
		P	2.27	2.00	1.74	1.49	1.26
	46	Q	2960	2320	1770	1280	855
		P	2.24	1.99	1.74	1.50	1.28
	43	Q	3110	2450	1870	1370	929
		P	2.22	1.97	1.74	1.51	1.30
	38	Q	3350	2660	2050	1520	1060
		P	2.18	1.95	1.73	1.52	1.32
	32	Q	3660	2920	2270	1700	1220
		P	2.12	1.91	1.71	1.52	1.33
	27	Q	3920	3140	2460	1870	1360
		P	2.07	1.88	1.69	1.51	1.34
	15	Q	4570	3700	2940	2280	-
		P	1.90	1.76	1.61	1.47	-
SHA22e/160-4 L	50	Q	3470	2670	1980	1380	854
		P	2.67	2.34	2.01	1.70	1.41
	46	Q	3720	2890	2160	1530	987
		P	2.64	2.33	2.02	1.73	1.45
	43	Q	3910	3050	2300	1650	1090
		P	2.62	2.31	2.02	1.74	1.47
	38	Q	4220	3320	2530	1850	1270
		P	2.56	2.28	2.01	1.75	1.50
	32	Q	4610	3650	2810	2090	1480
		P	2.49	2.24	1.99	1.76	1.53
	27	Q	4930	3930	3050	2290	1650
		P	2.42	2.19	1.97	1.75	1.54
	15	Q	5690	4590	3620	2780	-
		P	2.22	2.05	1.87	1.70	-
SHA22e/190-4 L	50	Q	4380	3440	2620	1910	1310
		P	3.60	3.19	2.79	2.42	2.07
	46	Q	4710	3720	2860	2110	1480
		P	3.54	3.16	2.79	2.44	2.11
	43	Q	4940	3920	3030	2260	1610
		P	3.50	3.13	2.78	2.44	2.13
	38	Q	5320	4240	3300	2490	1810
		P	3.41	3.08	2.75	2.44	2.15
	32	Q	5760	4610	3620	2760	2040
		P	3.30	3.00	2.71	2.43	2.16
	27	Q	6100	4910	3870	2980	2220
		P	3.19	2.92	2.66	2.40	2.15
	15	Q	6870	5560	4420	3450	-
		P	2.93	2.72	2.52	2.31	-
SHA34e/215-4 L	50	Q	4400	3360	2440	1650	967
		P	3.69	3.22	2.76	2.33	1.92
	46	Q	4790	3700	2740	1910	1200
		P	3.66	3.21	2.79	2.39	2.00
	43	Q	5090	3950	2960	2100	1370
		P	3.62	3.20	2.80	2.42	2.05
	38	Q	5560	4360	3310	2410	1640
		P	3.55	3.17	2.80	2.45	2.12
	32	Q	6100	4830	3720	2760	1950
		P	3.44	3.11	2.78	2.47	2.17
	27	Q	6530	5200	4040	3040	2190
		P	3.34	3.04	2.75	2.47	2.20
	15	Q	7500	6030	4760	3660	-
		P	3.06	2.84	2.63	2.41	-

Relating to 20 °C suction gas temperature without liquid subcooling

Supplementary cooling or reduced suction gas temperature

vap.bock.de

SHA condensing units air-cooled single-stage
Performance data

R22 | 50 Hz

Type	Amb. temp. °C		Cooling capacity Q_o [W] Evaporating temperature °C -20	-25	-30	-35	-40	Power consumption P_e [kW]
SHA34e/255-4 L	50	Q	5340	4170	3140	2250	1470	
		P	4.43	3.85	3.29	2.78	2.29	
	46	Q	5780	4550	3460	2510	1700	
		P	4.37	3.82	3.30	2.81	2.35	
	43	Q	6110	4820	3690	2710	1870	
		P	4.32	3.79	3.30	2.83	2.39	
	38	Q	6640	5280	4080	3040	2150	
		P	4.22	3.74	3.28	2.84	2.43	
	32	Q	7260	5810	4530	3420	2470	
		P	4.09	3.65	3.24	2.85	2.47	
	27	Q	7770	6230	4890	3730	2740	
		P	3.97	3.57	3.19	2.83	2.49	
	15	Q	8920	7210	5720	4440	3350	
		P	3.65	3.34	3.05	2.76	2.48	
SHA34e/315-4 L	50	Q	6430	4980	3720	2620	1690	
		P	5.32	4.57	3.88	3.24	2.66	
	46	Q	7000	5470	4120	2970	1980	
		P	5.27	4.55	3.90	3.29	2.74	
	43	Q	7410	5820	4430	3220	2200	
		P	5.21	4.53	3.90	3.32	2.79	
	38	Q	8090	6400	4920	3640	2550	
		P	5.10	4.48	3.89	3.35	2.85	
	32	Q	8870	7070	5490	4120	2970	
		P	4.95	4.38	3.85	3.36	2.90	
	27	Q	9500	7610	5950	4520	3300	
		P	4.80	4.29	3.80	3.35	2.92	
	15	Q	11000	8820	6980	5400	4050	
		P	4.40	4.00	3.62	3.25	2.91	
SHA34e/380-4 L	50	Q	8160	6340	4730	3340	2130	
		P	6.87	5.97	5.12	4.33	3.59	
	46	Q	8770	6870	5200	3740	2480	
		P	6.79	5.94	5.13	4.38	3.68	
	43	Q	9230	7270	5550	4040	2750	
		P	6.72	5.90	5.13	4.40	3.73	
	38	Q	9990	7930	6110	4540	3190	
		P	6.57	5.81	5.09	4.42	3.79	
	32	Q	10900	8700	6780	5120	3700	
		P	6.37	5.67	5.02	4.40	3.82	
	27	Q	11700	9330	7330	5600	4110	
		P	6.17	5.53	4.93	4.36	3.82	
	15	Q	13400	10800	8590	6690	5070	
		P	5.62	5.11	4.62	4.16	3.72	
SHA44e/475-4 L	50	Q	10600	8240	6170	4350	2780	
		P	7.98	6.91	5.89	4.94	4.04	
	46	Q	11400	8910	6740	4850	3210	
		P	7.91	6.89	5.93	5.02	4.17	
	43	Q	12000	9400	7160	5210	3530	
		P	7.83	6.86	5.94	5.07	4.25	
	38	Q	12900	10300	7860	5820	4070	
		P	7.69	6.79	5.94	5.13	4.37	
	32	Q	14000	11200	8690	6540	4690	
		P	7.48	6.67	5.89	5.16	4.46	
	27	Q	15000	12000	9370	7120	5210	
		P	7.28	6.53	5.83	5.15	4.51	
	15	Q	17100	13800	11000	8480	6390	
		P	6.70	6.12	5.56	5.03	4.51	

Relating to 20 °C suction gas temperature without liquid subcooling

Supplementary cooling or reduced suction gas temperature

vap.bock.de

SHA condensing units air-cooled single-stage
Performance data

R22 | 50 Hz

Type	Amb. temp. °C		Cooling capacity Q_o [W] Evaporating temperature °C -20	-25	-30	-35	-40	Power consumption P_e [kW]
SHA44e/565-4 L	50	Q	13100	10300	7820	5660	3790	
		P	9.74	8.45	7.23	6.09	5.02	
	46	Q	14000	11100	8470	6220	4270	
		P	9.63	8.40	7.24	6.15	5.13	
	43	Q	14600	11600	8950	6640	4630	
		P	9.53	8.34	7.23	6.18	5.19	
	38	Q	15700	12600	9750	7320	5230	
		P	9.34	8.23	7.18	6.20	5.27	
	32	Q	17000	13700	10700	8130	5930	
		P	9.07	8.05	7.09	6.18	5.32	
	27	Q	18000	14600	11500	8790	6500	
		P	8.82	7.87	6.98	6.13	5.34	
	15	Q	20500	16600	13300	10400	7830	
		P	8.11	7.34	6.61	5.92	5.25	
SHA44e/665-4 L	50	Q	15600	12300	9360	6830	4630	
		P	12.0	10.5	9.11	7.78	6.54	
	46	Q	16600	13200	10100	7440	5170	
		P	11.8	10.4	9.08	7.82	6.63	
	43	Q	17400	13800	10700	7910	5570	
		P	11.7	10.3	9.05	7.83	6.69	
	38	Q	18600	14900	11600	8680	6230	
		P	11.4	10.1	8.96	7.83	6.76	
	32	Q	20100	16100	12700	9600	7030	
		P	11.0	9.90	8.81	7.78	6.80	
	27	Q	21300	17200	13500	10400	7680	
		P	10.7	9.65	8.66	7.71	6.80	
	15	Q	24200	19600	15600	12200	9220	
		P	9.76	8.95	8.17	7.41	6.69	

Relating to 20 °C suction gas temperature without liquid subcooling

Supplementary cooling or reduced suction gas temperature

vap.bock.de

Operating limits

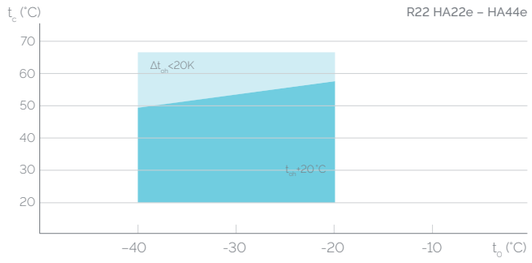

t_o Evaporating temperature (°C)
t_c Condensing temperature (°C)
Δt_{oh} Suction gas superheat (K)
t_{oh} Suction gas temperature (°C)

● Unlimited application range
○ Supplementary cooling or reduced suction gas temperature (Δt_{oh}<20K)

Max. permissible operating pressure (LP/HP) [1]: 19/28 bar
[1] LP = low pressure, HP = high pressure

SHA condensing units air-cooled single-stage
Technical data

SHA

Type	Compressor ①				Fan / Condenser			Receiver
	Displace-ment 50 Hz (1450 rpm)	Voltage ②	Max. Working current		Max. Working current 50 Hz	Max. Power con-sumption 50 Hz	Air flow 50 Hz	Capacity
	m³/h		A		A	W	m³/h	Ltr.
			Δ	Y				
SHA22e/125-4 L	11.1	③	8.1	4.7	1x1.22	1x280	3550	6.0
SHA22e/160-4 L	13.7	③	9.6	5.5	1x1.22	1x280	3410	6.0
SHA22e/190-4 L	16.5	③	10.9	6.3	1x2.50	1x580	5950	8.0
SHA34e/215-4 L	18.8	③	12.1	7.0	1x2.50	1x580	5950	8.0
SHA34e/255-4 L	22.1	③	13.8	8.0	1x2.50	1x580	5950	8.0
SHA34e/315-4 L	27.3	③	17.1	9.9	1x2.50	1x580	5950	8.0
SHA34e/380-4 L	33.1	③	19.4	11.2	2x2.50	2x500	8740	14.5
	PW 1+2*							
SHA44e/475-4 L	41.3	④	15.2		2x2.50	2x500	9490	14.5
SHA44e/565-4 L	49.2	④	18.3		2x2.50	2x500	9490	14.5
SHA44e/655-4 L	57.7	④	20.3		4x2.50	4x 500	16280	23.0

*PW = Part Winding, motors for part winding start 1 = first part winding 2 = second part winding

Explanations

① Further explanations and technical data see brochure "semi-hermetic Bock compressors"

② Tolerance (± 10%) relates to the mean value of the voltage range. Other voltages and current types on request.

③ 220-240 V Δ / 380-420 V Y - 3 - 50 Hz

④ 380-420 V Y/YY - 3 - 50 Hz PW
PW = Part Winding, motors for part winding start
(no start unloaders required)
- Designs for Y/Δ on request

SHA condensing units air-cooled single-stage
Dimensions and connections

SHA22e L » SHA22e/125-4 L » SHA22e/160-4 L

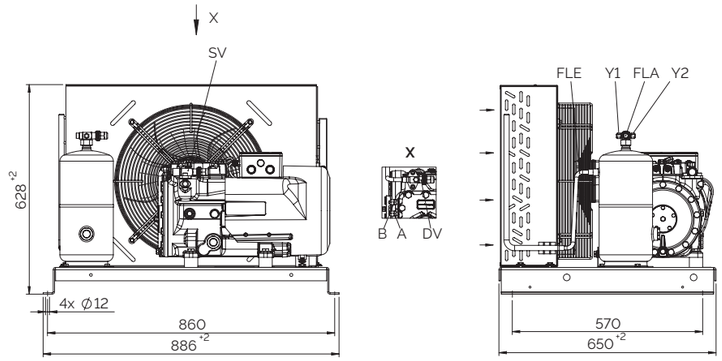

SHA22e L » SHA22e/190-4 L

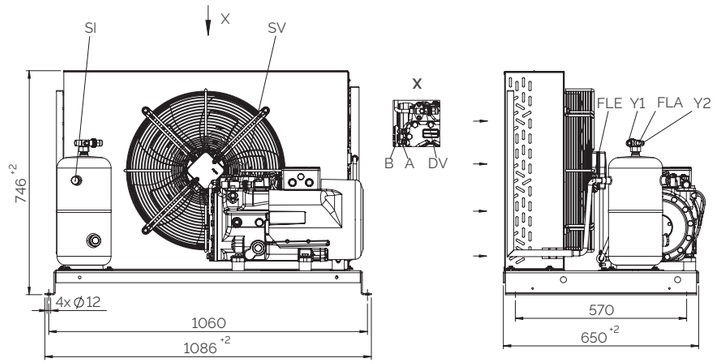

SHA34e L » SHA34e/215-4 L » SHA34e/255-4 L » SHA34e/315-4 L

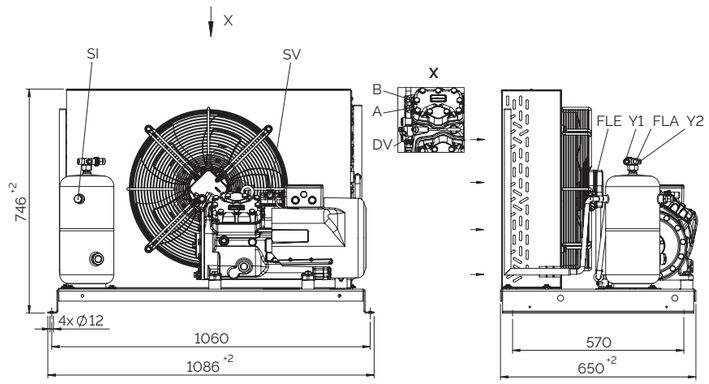

Dimensions in mm

Further compressor connections can be found in the brochure "semi-hermetic Bock compressors"

SHA condensing units air-cooled single-stage
Dimensions and connections

SHA34e L » SHA34e/380-4 L

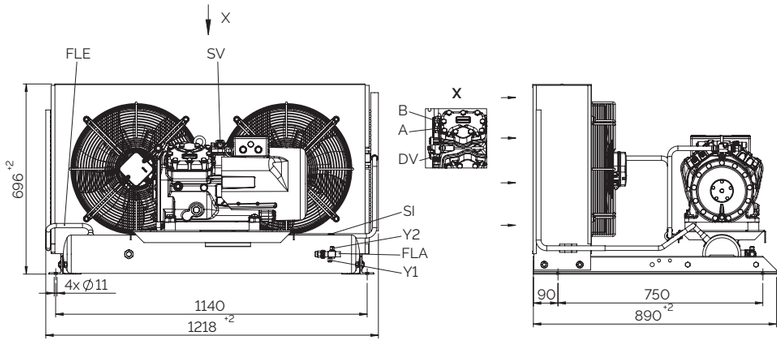

SHA44e L » SHA44e/475-4 L » SHA44e/565-4 L

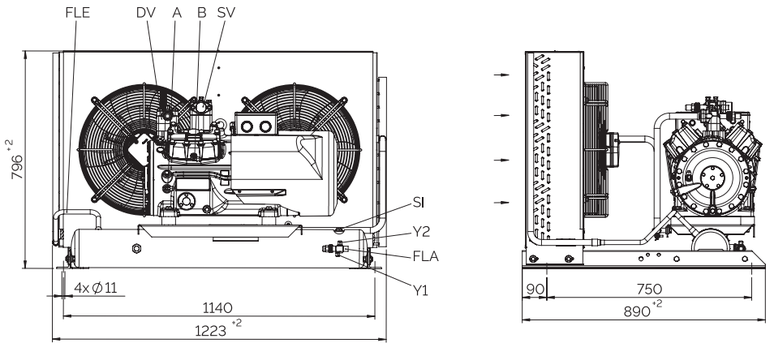

SHA44e L » SHA44e/655-4 L

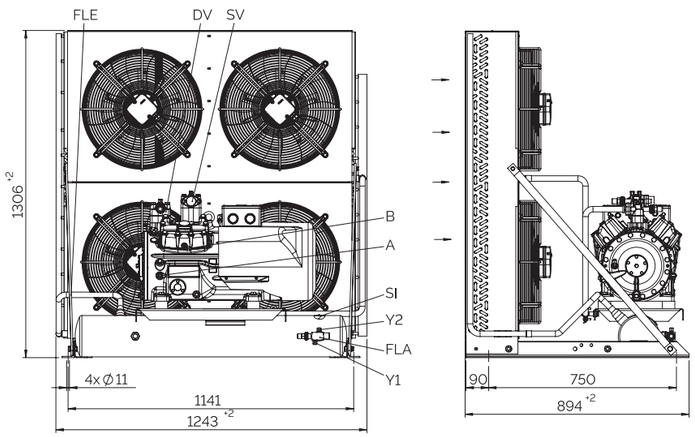

Dimensions in mm

Further compressor connections can be found in the brochure "semi-hermetic Bock compressors"

SHA condensing units air-cooled single-stage
Connections, Scope of supply and accessories

SHA

	Connections ①						
	SV		FLA		SI	Y1	Y2
Type	mm	Inch	mm	Inch	Inch	Inch	Inch
SHA22e/125-4 L	16	5/8	12	1/2	-	7/16 UNF	7/16 UNF
SHA22e/160-4 L	16	5/8	12	1/2	-	7/16 UNF	7/16 UNF
SHA22e/190-4 L	16	5/8	16	5/8	1/2 NPTF	7/16 UNF	7/16 UNF
SHA34e/215-4 L	22	7/8	16	5/8	1/2 NPTF	7/16 UNF	7/16 UNF
SHA34e/255-4 L	22	7/8	16	5/8	1/2 NPTF	7/16 UNF	7/16 UNF
SHA34e/315-4 L	22	7/8	16	5/8	1/2 NPTF	7/16 UNF	7/16 UNF
SHA34e/380-4 L	22	7/8	16	5/8	1/2 NPTF	7/16 UNF	7/16 UNF
SHA44e/475-4 L	35	1 3/8	16	5/8	1/2 NPTF	7/16 UNF	7/16 UNF
SHA44e/565-4 L	35	1 3/8	16	5/8	1/2 NPTF	7/16 UNF	7/16 UNF
SHA44e/655-4 L	35	1 3/8	22	7/8	1/2 NPTF	7/16 UNF	7/16 UNF

SV - Suction line shut off valve
FLA - Liquid outlet
SI - Connection safety valve
Y1 - Connection liquid side, lockable
Y2 - Connection liquid side, not lockable

① Further compressor connections can be found in the brochure "semi-hermetic Bock compressors"

	SHA22	SHA34	SHA44
Semi-hermetic reciprocating compressor with drive motor for part winding start 380-420 V Y/YY - 3 - 50 Hz, 440-480 V Y/YY - 3 - 60 Hz single-piece compressor housing with integrated electric motor, mounted on the liquid receiver using anti-vibration rubber pads	see HH catalog		
Condenser with copper tubes and aluminum fins, optimized circuit, improved heat transfer and increased fin surface area	●	●	●
Low noise fan 230 V -1- 50/60 Hz, with bimetal winding protection, speed control possible	●	●	●
Generously sized liquid receiver with sight glass and Rotalock shut-off valve with brazing connection	●	●	●
Piping on discharge and liquid side	●	●	●
Inert gas charge	●	●	●
Rubber plates for installation of the unit	●	●	●
High pressure safety limiter + controller / + low pressure controller	○	○	○
Safety valve for receiver from 8l volume		○	○
Oil separator	○	○	○
Speed control available for all units with one fan	○	○	
Three-phase fan	○	○	○
Larger liquid receiver	○	○	○
Oil pressure safety switch MP 55 (adjustable)	○	○	
Oil pressure safety switch MP 54 (fixed)			○
Oil differential pressure sensor DELTA-P II			○
Weatherproof housing - easy assembly on site, thanks to assembly-friendly connection technology - also suitable for noise-reduced operation - eavailable for all units with one fan	○	○	

Further accessories can be found in the brochure "semi-hermetic Bock compressors" or in our compressor selection tool VAP: vap.bock.de as well as in our price list.

● Scope of supply (standard)
○ Available accessories

SHGZ
Condensing units air-cooled two-stage

91 At a glance
92–95 Performance data
96 Technical data
97 Dimensions and connections
98 Scope of supply and accessories

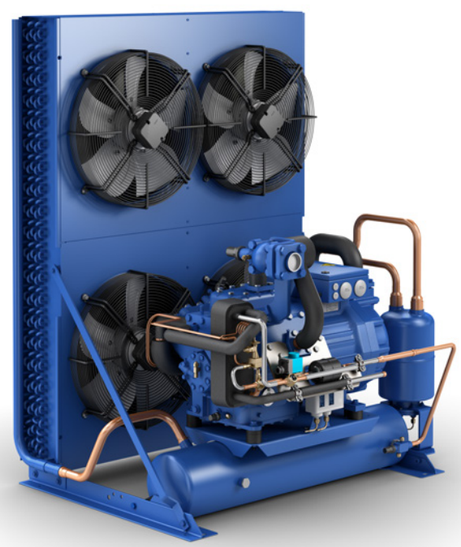

SHGZ-L Condensing units air-cooled

For extended use in low temperature, condensing units are available, equipped with two-stage compressors BOCK HGZ7.

Efficiency

Reliability

These two-stage compressors in combination with the largest Bock condenser-fan unit offer sufficient power reserves for demanding applications such as blast freezers.
The two-stage condensing units are equipped as standard with already mounted two-stage components.

- Liquid subcooler
- Expansion valve
- Solenoid valve
- Sight glass
- Filter drier

SHGZ condensing units air-cooled two-stage
At a glance

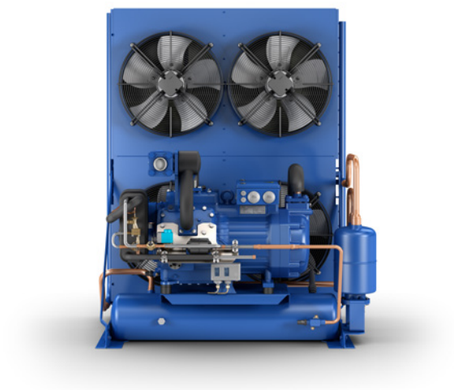

The current range

1 model size with 3 capacity stages from 93.7 to 122.4 m³/h (50 Hz)

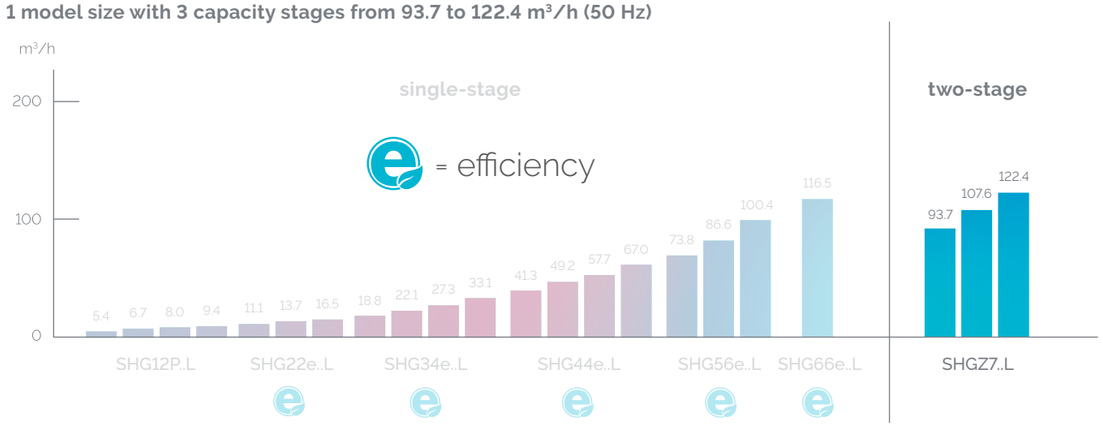

Type key – condensing units air-cooled

SHGZX7 / 2110 - 4SL

- Air-cooled condensing unit
- Motor variant [4)]
- Number of poles
- Swept volume
- BSize
- Ester oil filling [2)]
- Two-stage
- Series [1)]

[1)] SHG = Hermetic Gas-cooled (sauggasgekühlt)
[2)] X = Ester oil filling (HFC refrigerants e.g. R134a, R404A, R507, R407C)
[3)] S = More powerful motor e.g. air-conditioning applications

SHGZ condensing units air-cooled two-stage
Performance data

R404A/R507 | 50 Hz

Type	Amb. temp. °C		Cooling capacity Q_o [W]								Power consumption P_e [kW]
			Evaporating temperature °C								
			-30	-35	-40	-45	-50	-55	-60	-65	-70
SHGZX7/1620-4 L	50	Q	-	-	19900	16100	12900	10300	7970	-	-
		P	-	-	25.0	22.5	20.0	17.7	15.6	-	-
	46	Q	-	-	20500	16600	13400	10700	8370	6410	-
		P	-	-	24.4	21.9	19.6	17.3	15.2	13.2	-
	43	Q	-	-	20900	17000	13700	11000	8610	6640	-
		P	-	-	23.9	21.5	19.2	17.0	14.9	13.0	-
	38	Q	-	26400	21600	17500	14100	11300	8930	6930	5150
		P	-	25.4	23.0	20.7	18.5	16.4	14.4	12.5	10.8
	32	Q	-	27200	22200	18000	14600	11700	9200	7160	5370
		P	-	24.2	22.0	19.8	17.7	15.7	13.8	12.0	10.4
	27	Q	33800	27800	22700	18400	14800	11900	9360	7280	5480
		P	25.5	23.2	21.1	19.0	17.0	15.1	13.3	11.6	10.0
	15	Q	35600	29200	23800	19200	-	-	-	-	-
		P	22.8	20.9	19.0	17.3	-	-	-	-	-
SHGZX7/1860-4 L	50	Q	-	-	22600	18300	14700	11700	9080	-	-
		P	-	-	28.5	25.6	22.7	20.1	17.6	-	-
	46	Q	-	-	23300	18900	15300	12200	9550	7320	-
		P	-	-	27.8	24.9	22.2	19.6	17.1	14.8	-
	43	Q	-	-	23900	19400	15600	12500	9840	7580	-
		P	-	-	27.2	24.4	21.8	19.2	16.8	14.6	-
	38	Q	-	30100	24600	20000	16200	13000	10300	7930	5890
		P	-	29.1	26.3	23.6	21.0	18.5	16.2	14.1	12.1
	32	Q	-	31000	25400	20600	16700	13300	10600	8200	6150
		P	-	27.7	25.1	22.5	20.1	17.7	15.5	13.5	11.5
	27	Q	38600	31800	25900	21100	17000	13600	10800	8350	6290
		P	29.2	26.6	24.0	21.6	19.3	17.1	15.0	13.0	11.2
	15	Q	40600	33300	27200	22000	17700	14100	-	-	-
		P	26.1	23.8	21.7	19.6	17.6	15.6	-	-	-
SHGZX7/2110-4 L	50	Q	-	-	-	20600	16500	13100	10300	-	-
		P	-	-	-	28.9	25.7	22.6	19.7	-	-
	46	Q	-	-	26300	21300	17200	13800	10800	8270	-
		P	-	-	31.5	28.2	25.0	22.0	19.2	16.6	-
	43	Q	-	-	26900	21900	17700	14100	11200	8580	-
		P	-	-	30.9	27.6	24.5	21.6	18.8	16.3	-
	38	Q	-	33900	27800	22600	18300	14700	11600	8990	6680
		P	-	33.1	29.8	26.7	23.7	20.9	18.2	15.7	13.4
	32	Q	-	35100	28700	23400	18900	15100	12000	9310	6980
		P	-	31.6	28.4	25.4	22.6	19.9	17.4	15.0	12.8
	27	Q	-	35900	29400	23900	19300	15400	12200	9490	7140
		P	-	30.2	27.3	24.4	21.7	19.1	16.7	14.5	12.4
	15	Q	45900	37700	30800	24900	20100	16000	12700	-	-
		P	29.8	27.1	24.5	22.1	19.7	17.5	15.4	-	-

Relating to 10 K suction gas superheat with liquid subcooling

Operating limits

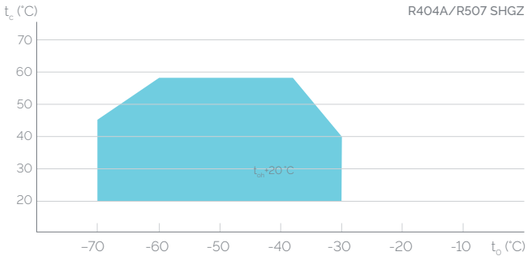

t_o Evaporating temperature (°C)
t_c Condensing temperature (°C)
Δt_{oh} Suction gas superheat (K)
t_{oh} Suction gas temperature (°C)

Unlimited application range

Max. permissible operating pressure (LP/HP) [1]: 19/28 bar
[1] LP = low pressure, HP = high pressure

SHGZ condensing units air-cooled two-stage
Performance data

R448A | 50 Hz

Type	Amb. temp. °C		Cooling capacity Q_o [W]								Power consumption P_e [kW]
			Evaporating temperature °C								
			-25	-30	-35	-40	-45	-50	-55	-60	-65
SHGZX7/1620-4 L	50	Q	-	24900	20900	17100	13700	10700	8160	-	-
		P	-	25.5	23.1	20.8	18.6	16.5	14.6	-	-
	46	Q	-	25700	21500	17600	14000	10900	8250	6330	-
		P	-	24.8	22.5	20.2	18.0	16.0	14.1	12.5	-
	43	Q	30900	26300	22000	17900	14200	11000	8310	6340	-
		P	26.6	24.3	22.0	19.7	17.6	15.6	13.8	12.2	-
	38	Q	32000	27300	22700	18400	14600	11200	8410	6350	5080
		P	25.6	23.4	21.1	19.0	16.9	15.0	13.3	11.8	10.5
	32	Q	33400	28300	23500	19000	14900	11400	8520	6380	5050
		P	24.5	22.3	20.1	18.1	16.1	14.3	12.7	11.3	10.2
	27	Q	34500	29200	24100	19400	15200	11600	8610	6400	5050
		P	23.5	21.3	19.3	17.3	15.5	13.8	12.3	11.0	9.99
	15	Q	36900	31000	25500	20400	15900	12000	8850	6540	5150
		P	21.0	19.1	17.2	15.5	13.9	12.5	11.3	10.3	9.57
SHGZX7/1860-4 L	50	Q	-	-	23700	19500	15600	12200	9350	-	-
		P	-	-	26.4	23.7	21.1	18.7	16.4	-	-
	46	Q	-	29200	24500	20000	16000	12400	9450	7260	-
		P	-	28.4	25.7	23.0	20.5	18.1	15.9	14.0	-
	43	Q	-	29900	25000	20400	16200	12600	9530	7280	-
		P	-	27.8	25.1	22.5	20.0	17.7	15.6	13.7	-
	38	Q	36300	31000	25800	21000	16600	12800	9640	7290	5840
		P	29.5	26.8	24.1	21.6	19.2	17.0	15.0	13.2	11.7
	32	Q	37900	32200	26800	21700	17100	13100	9770	7320	5800
		P	28.1	25.5	23.0	20.6	18.3	16.2	14.3	12.7	11.3
	27	Q	39200	33200	27500	22200	17400	13300	9870	7350	5800
		P	27.0	24.5	22.0	19.7	17.5	15.5	13.8	12.3	11.1
	15	Q	42000	35400	29100	23400	18200	13800	10200	7500	5900
		P	24.1	21.9	19.7	17.6	15.7	14.0	12.6	11.4	10.6
SHGZX7/2110-4 L	50	Q	-	-	-	22000	17600	13800	10700	-	-
		P	-	-	-	26.9	23.9	21.0	18.4	-	-
	46	Q	-	32700	27500	22600	18000	14100	10800	8260	-
		P	-	32.4	29.2	26.1	23.1	20.4	17.9	15.6	-
	43	Q	-	33500	28100	23000	18400	14300	10900	8270	-
		P	-	31.7	28.5	25.5	22.6	19.9	17.4	15.3	-
	38	Q	40700	34800	29100	23700	18800	14500	11000	8290	6640
		P	33.6	30.5	27.4	24.5	21.7	19.1	16.8	14.7	13.0
	32	Q	42500	36200	30200	24500	19300	14800	11100	8320	6600
		P	32.1	29.1	26.1	23.3	20.6	18.2	16.0	14.1	12.6
	27	Q	44000	37400	31000	25100	19800	15100	11300	8360	6590
		P	30.8	27.9	25.0	22.3	19.7	17.4	15.4	13.7	12.3
	15	Q	47300	39900	32900	26500	20600	15600	11600	8520	6700
		P	27.6	24.9	22.3	19.9	17.7	15.7	14.1	12.7	11.7

Relating to 10 K suction gas superheat with liquid subcooling

Operating limits

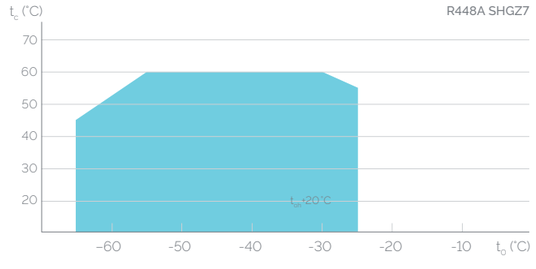

t_o Evaporating temperature (°C)
t_c Condensing temperature (°C)
Δt_{oh} Suction gas superheat (K)
t_{oh} Suction gas temperature (°C)

Unlimited application range

Max. permissible operating pressure (LP/HP) [1]: 19/28 bar
[1] LP = low pressure, HP = high pressure

SHGZ condensing units air-cooled two-stage
Performance data

R449A | 50 Hz

Type	Amb. temp. °C		Cooling capacity Q_o [W] Evaporating temperature °C -25	-30	-35	-40	-45	-50	-55	-60	-65	Power consumption P_e [kW]
SHGZX7/1620-4 L	50	Q	-	24800	20800	17100	13600	10700	8160	-	-	
		P	-	25.4	23.0	20.7	18.5	16.4	14.5	-	-	
	46	Q	-	25600	21400	17500	14000	10900	8250	6340	-	
		P	-	24.7	22.4	20.1	18.0	15.9	14.1	12.4	-	
	43	Q	30700	26200	21900	17900	14200	11000	8320	6350	-	
		P	26.5	24.2	21.9	19.7	17.5	15.6	13.8	12.2	-	
	38	Q	31900	27100	22600	18400	14500	11200	8420	6370	5100	
		P	25.5	23.3	21.1	18.9	16.9	15.0	13.3	11.8	10.5	
	32	Q	33300	28200	23400	19000	14900	11400	8530	6390	5070	
		P	24.4	22.2	20.1	18.0	16.1	14.3	12.7	11.3	10.2	
	27	Q	34400	29100	24100	19400	15200	11600	8620	6420	5060	
		P	23.4	21.3	19.2	17.3	15.4	13.7	12.2	11.0	9.98	
	15	Q	36800	31000	25500	20400	15900	12000	8870	6560	5160	
		P	20.9	19.0	17.2	15.5	13.9	12.5	11.3	10.3	9.56	
SHGZX7/1860-4 L	50	Q	-	-	23600	19400	15600	12200	9350	-	-	
		P	-	-	26.3	23.6	21.0	18.6	16.4	-	-	
	46	Q	-	29000	24400	20000	15900	12400	9460	7280	-	
		P	-	28.3	25.6	22.9	20.4	18.0	15.9	14.0	-	
	43	Q	-	29700	24900	20400	16200	12600	9540	7290	-	
		P	-	27.7	25.0	22.4	19.9	17.6	15.5	13.7	-	
	38	Q	36100	30800	25700	21000	16600	12800	9650	7310	5850	
		P	29.3	26.7	24.1	21.5	19.1	16.9	14.9	13.2	11.7	
	32	Q	37700	32100	26700	21600	17100	13100	9780	7340	5820	
		P	28.0	25.4	22.9	20.5	18.2	16.1	14.3	12.7	11.3	
	27	Q	39000	33100	27400	22200	17400	13300	9890	7370	5810	
		P	26.9	24.4	21.9	19.6	17.5	15.5	13.7	12.3	11.1	
	15	Q	41900	35300	29100	-	-	13800	10200	7520	5920	
		P	24.0	21.8	19.6	-	-	14.0	12.6	11.4	10.6	
SHGZX7/2110-4 L	50	Q	-	-	-	21900	17600	13800	10700	-	-	
		P	-	-	-	26.8	23.8	21.0	18.4	-	-	
	46	Q	-	32600	27400	22500	18000	14100	10800	8270	-	
		P	-	32.2	29.0	26.0	23.0	20.3	17.8	15.6	-	
	43	Q	-	33400	28000	23000	18300	14300	10900	8290	-	
		P	-	31.5	28.4	25.4	22.5	19.8	17.4	15.3	-	
	38	Q	40500	34700	29000	23700	18800	14500	11000	8310	6660	
		P	33.5	30.4	27.3	24.4	21.6	19.0	16.7	14.7	13.0	
	32	Q	42300	36100	30100	24500	19300	14800	11200	8340	6620	
		P	32.0	29.0	26.0	23.2	20.5	18.1	16.0	14.1	12.6	
	27	Q	43800	37300	31000	25100	19700	15100	11300	8380	6610	
		P	30.7	27.8	24.9	22.2	19.7	17.4	15.4	13.6	12.2	
	15	Q	47100	39800	32900	26400	20600	15700	11600	8550	6730	
		P	27.5	24.8	22.3	19.8	17.6	15.7	14.0	12.7	11.7	

Relating to 10 K suction gas superheat with liquid subcooling

Operating limits

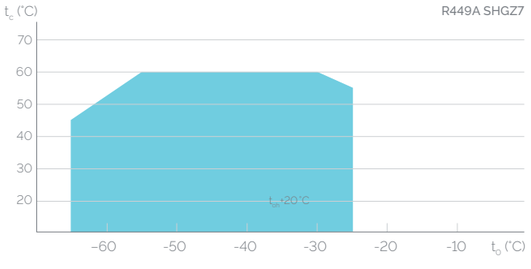

t_o Evaporating temperature (°C)
t_c Condensing temperature (°C)
Δt_{oh} Suction gas superheat (K)
t_{oh} Suction gas temperature (°C)

Unlimited application range

Max. permissible operating pressure (LP/HP) [1]: 19/28 bar
[1] LP = low pressure, HP = high pressure

SHGZ condensing units air-cooled two-stage
Performance data

R22 | 50 Hz

Type	Amb. temp. °C		Cooling capacity Q_o [W] Evaporating temperature °C -30	-35	-40	-45	-50	-55	-60	Power consumption P_e [kW]
SHGZ7/1620-4 L	50	Q	27700	22500	18000	14100	10900	-	-	
		P	27.0	24.5	22.2	19.9	17.8	-	-	
	46	Q	28000	22700	18200	14300	11100	-	-	
		P	26.1	23.7	21.5	19.4	17.4	-	-	
	43	Q	28200	22900	18400	14500	11200	-	-	
		P	25.5	23.2	21.0	19.0	17.1	-	-	
	38	Q	28500	23300	18700	14800	11400	8670	-	
		P	24.4	22.3	20.2	18.3	16.5	14.8	-	
	32	Q	29000	23600	19000	15000	11700	8870	-	
		P	23.2	21.2	19.3	17.6	15.9	14.4	-	
	27	Q	29300	23900	19300	15300	11900	9030	6750	
		P	22.2	20.3	18.6	17.0	15.5	14.1	12.7	
	15	Q	30100	24600	19900	15800	-	-	-	
		P	19.8	18.2	16.9	15.6	-	-	-	
SHGZ7/1860-4 L	50	Q	31400	25600	20600	16200	-	-	-	
		P	31.0	28.0	25.3	22.6	-	-	-	
	46	Q	31800	26000	20900	16400	12700	-	-	
		P	30.0	27.2	24.5	22.0	19.7	-	-	
	43	Q	32100	26200	21100	16600	12800	-	-	
		P	29.2	26.5	24.0	21.6	19.3	-	-	
	38	Q	32500	26600	21400	16900	13100	9950	-	
		P	28.0	25.4	23.0	20.8	18.7	16.7	-	
	32	Q	33100	27100	21800	17200	13400	10200	-	
		P	26.6	24.2	22.0	19.9	18.0	16.2	-	
	27	Q	33500	27500	22100	17500	13600	10400	7830	
		P	25.4	23.2	21.1	19.2	17.5	15.8	14.3	
	15	Q	34500	28300	22800	18100	-	-	-	
		P	22.6	20.8	19.1	17.6	-	-	-	
SHGZ7/2110-4 L	50	Q	35800	29100	23300	18300	-	-	-	
		P	35.4	31.9	28.6	25.6	-	-	-	
	46	Q	36200	29500	23600	18600	14400	-	-	
		P	34.2	30.9	27.8	24.9	22.1	-	-	
	43	Q	36500	29700	23800	18800	14600	-	-	
		P	33.4	30.1	27.1	24.3	21.7	-	-	
	38	Q	37000	30200	24200	19100	14900	11300	-	
		P	31.9	28.9	26.1	23.5	21.0	18.7	-	
	32	Q	37600	30700	24700	19500	15200	11600	-	
		P	30.3	27.5	24.9	22.5	20.2	18.1	-	
	27	Q	38000	31100	25000	19800	15400	11800	8790	
		P	28.9	26.3	23.9	21.6	19.6	17.7	15.9	
	15	Q	39100	32000	25800	20500	-	12200	-	
		P	25.7	23.6	21.6	19.8	-	16.7	-	

Relating to 10 K suction gas superheat with liquid subcooling

Operating limits

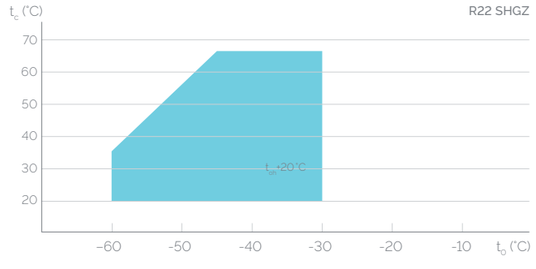

t_o Evaporating temperature (°C)
t_c Condensing temperature (°C)
Δt_{oh} Suction gas superheat (K)
t_{oh} Suction gas temperature (°C)

Unlimited application range

Max. permissible operating pressure (LP/HP) [1]: 19/28 bar
[1] LP = low pressure, HP = high pressure

SHGZ condensing units air-cooled two-stage
Technical data

SHGZ

Type	Compressor ① Displacement 50 Hz (1450 rpm)	Compressor ① Voltage ②	Compressor ① Max. Working current	Fan / Condenser Max. Working current 50 Hz	Fan / Condenser Max. Power consumption 50 Hz	Fan / Condenser Air flow 50 Hz	Receiver Capacity
	m³/h		A	A	W	m³/h	Ltr.
			PW 1+2*				
SHGZX7/1620-4 L R448A/449A SHGZ7/1620-4 L R22 SHGZX7/1620-4 L R404A/R507	93.7	④	50.0	4 x 3.00	4 x 680	21210	35.0
SHGZX7/1860-4 L R448A/449A SHGZ7/1860-4 L R22 SHGZX7/1860-4 L R404A/R507	107.8	④	55.0	4 x 3.00	4 x 680	21210	35.0
SHGZX7/2110-4 L R448A/449A SHGZ7/2110-4 L R22 SHGZX7/2110-4 L R404A/R507	122.4	④	68.0	4 x 3.00	4 x 680	21210	35.0

*PW = Part Winding, motors for part winding start 1 = first part winding 2 = second part winding

Explanations

① Further explanations and technical data see brochure "semi-hermetic Bock compressors"

② Tolerance (± 10%) relates to the mean value of the voltage range. Other voltages and current types on request.

④ 380-420 V Y/YY - 3 - 50 Hz PW
PW = Part Winding, motors for part winding start
(no start unloaders required)

SHGZ condensing units air-cooled two-stage
Dimensions and connections

SHGZ » SHGZ7/1620-4 L » SHGZ7/1860-4 L » SHGZ7/2110-4 L

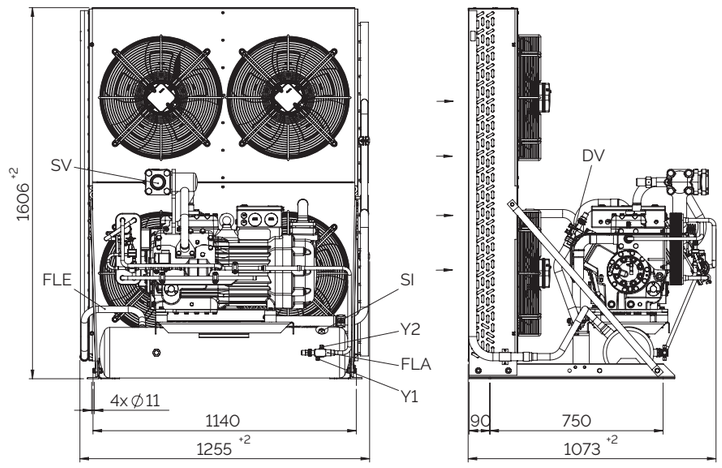

Dimensions in mm

SHGZ

Type	Connections ① SV mm	SV Inch	FLA mm	FLA Inch	SI Inch	Y1 Inch	Y2 Inch
SHGZX7/1620-4 L R448A/449A SHGZ7/1620-4 L R22 SHGZX7/1620-4 L R404A/R507	54	2 1/8	22	7/8	1/2 NPTF	7/16 UNF	7/16 UNF
SHGZX7/1860-4 L R448A/449A SHGZ7/1860-4 L R22 SHGZX7/1860-4 L R404A/R507	54	2 1/8	22	7/8	1/2 NPTF	7/16 UNF	7/16 UNF
SHGZX7/2110-4 L R448A/449A SHGZ7/2110-4 L R22 SHGZX7/2110-4 L R404A/R507	54	2 1/8	22	7/8	1/2 NPTF	7/16 UNF	7/16 UNF

SV = Suction line shut off valve
FLA = Liquid outlet
SI = Connection safety valve
Y1 = Connection liquid side, lockable
Y2 = Connection liquid side, not lockable

① Further compressor connections can be found in the brochure "semi-hermetic Bock compressors"

SHGZ condensing units air-cooled two-stage
Scope of supply and accessories

SHGZ

	SHGZ
Semi-hermetic reciprocating compressor with drive motor for part winding start 380-420 V Y/YY - 3 - 50 Hz, 440-480 V Y/YY - 3 - 60 Hz single-piece compressor housing with integrated electric motor, mounted on the liquid receiver using anti-vibration rubber pads	see HH catalog
Condenser with copper tubes and aluminum fins, optimized circuit, improved heat transfer and increased fin surface area	●
Low noise fan 230 V -1- 50/60 Hz, with bimetal winding protection, speed control possible	●
Generously sized liquid receiver with sight glass and Rotalock shut-off valve with brazing connection	●
Piping on discharge and liquid side	●
Liquid subcooler, re-injection valve, solenoid valve 230 V - 1 - 50 / 60 Hz, sight glass, filter drier, directly mounted onto the compressor, fully assembled and insulated with pipes ready for connection.	●
Inert gas charge	●
Rubber plates for installation of the unit	●
High pressure safety limiter + controller / + low pressure controller	○
Safety valve for receiver	○
Oil separator	○
Three-phase fan	○
Oil pressure safety switch MP 54 (fixed)	○
Oil differential pressure sensor DELTA-P II	○

Further accessories can be found in the brochure "semi-hermetic Bock compressors" or in our compressor selection tool VAP: vap.bock.de as well as in our price list.

● Scope of supply (standard)
○ Available accessories

BOCK service and support

°Clever+Cool Experts live

BOCKshop

BOCK CO_2Tool

BOCK VAP

From experts for experts – our new online formats can be used from any computer, regardless of location: Office, workshop or even at home.

To ensure that you can make the best possible use of the advantages of BOCK compressors, we support you online and personal with four service and support modules. There you will find valuable information: from plant planning and design to implementation and operation to retrofitting or upgrading existing systems.

BOCK training courses
Together with Danfoss, BOCK offers special (online) user training courses. For this purpose, a complete transcritical supermarket refrigeration system with the latest CO_2 technology is in operation at the BOCK training center – with heat recovery + air conditioning + parallel compression + ejector – in order to make the seminars more practical.

BOCKshop
The online catalog in the **BOCK**shop is the best choice to find spare parts for your BOCK compressor easily and quickly around the clock. Including all Ex-drawings and parts lists also for printing.
» bockshop.bock.de

BOCKCO_2Tool
The strengths of the **BOCK**CO_2Tool based on Excel: Support for the selection of CO_2 compressors, e.g. by displaying the system schematic as RI flow diagram and refrigeration circuit in log-p-h-diagram, as well as selecting compressors in rack systems and for special CO_2 systems such as booster systems.
» Usage on request: vap@bock.de

BOCKVAP
The BOCK compressor selection program (VAP) is the perfect tool, to find suitable compressors or condensing units for your stationary or mobile application: Simply enter cooling capacity and operating conditions and the suitable components will be displayed immediately. In addition, the tool provides you with further information, e.g. application limits, performance data, dimensions and connections, scope of delivery, accessories, 3 D compressor models and much more.

Another advantage: **BOCK**VAP is available to you free of charge as an online and offline version for PC installation.
» vap.bock.de

BOCK is one of the world's technology and innovation leaders in the development of environmentally friendly, economical solutions in the field of refrigeration and air-conditioning technology, including heat pumps and heat recovery – with one of the world's largest portfolios of compressors for natural refrigerants such as CO_2 (R744), hydrocarbons and other low-GWP refrigerants.

BOCK

Bock GmbH
Benzstraße 7
72636 Frickenhausen
Deutschland
Tel +49 7022 9454-0
Fax +49 7022 9454-137
bock.de

96235 - 04/2021 © Bock GmbH. All rights reserved. Subject to modifications. Printed in Germany.